iFlex™

# Heavy Duty Topple Guardrail

with ForkGuard Kerb Guardrail

www.asafe.com

# > 2.5m ↕

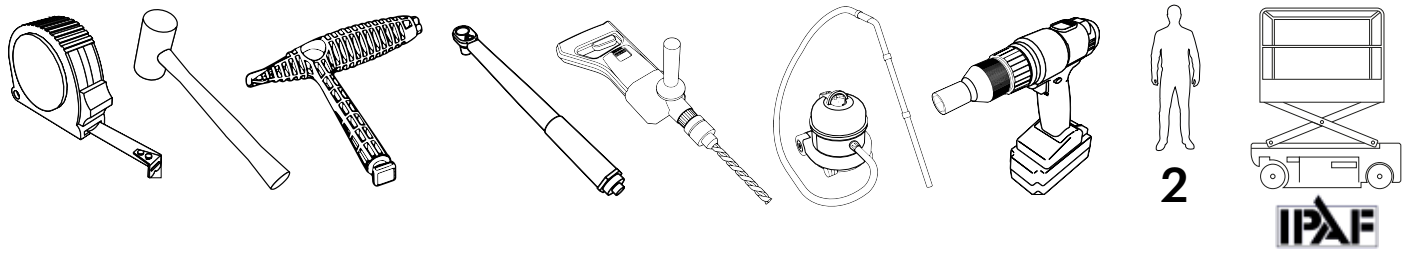


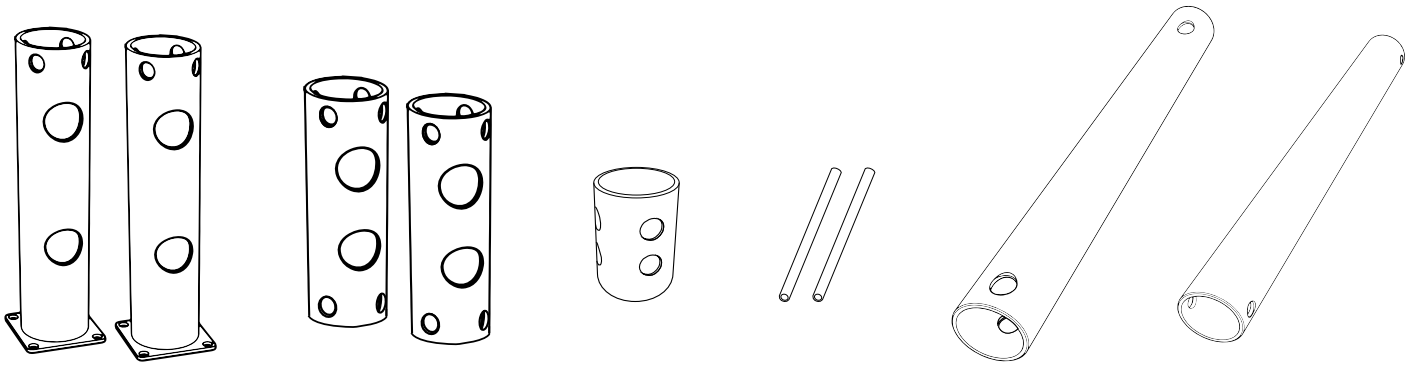

2X | 2-8X | 2-8X | 4-10X | 4-10X | 2X

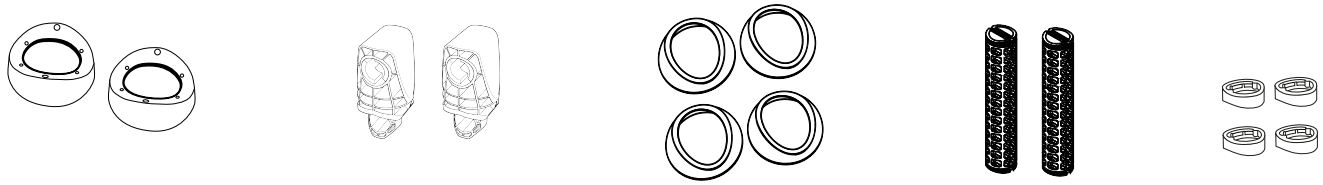

8-20X | 8-20X | 4X | 2X | 4X

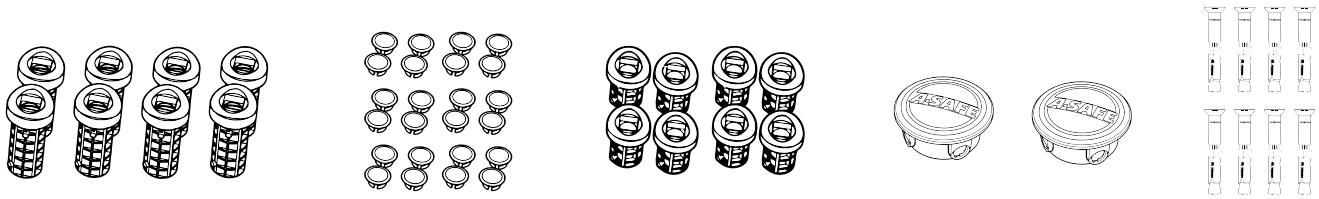

24-72X | 12-112X | 16-40X | 2X | 8X

| | 2.2m | 3.2m | 4.2m | 5.2m |
|---|---|---|---|---|
| 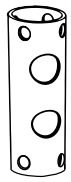 | 2 | 4 | 6 | 8 |
| 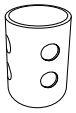 | 2 | 4 | 6 | 8 |
| 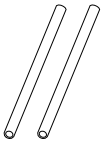 | 4 | 6 | 8 | 10 |
| 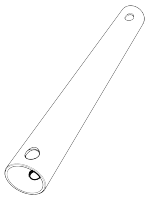 | 4 | 6 | 8 | 10 |
| | 8 | 12 | 16 | 20 |
| | 8 | 12 | 16 | 20 |
| | 24 | 40 | 56 | 72 |
| | 32 | 64 | 88 | 112 |
| | 16 | 24 | 32 | 40 |

# eFlex ForkGuard

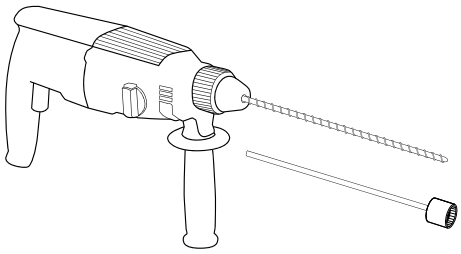

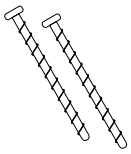

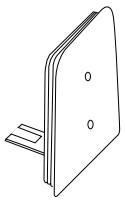

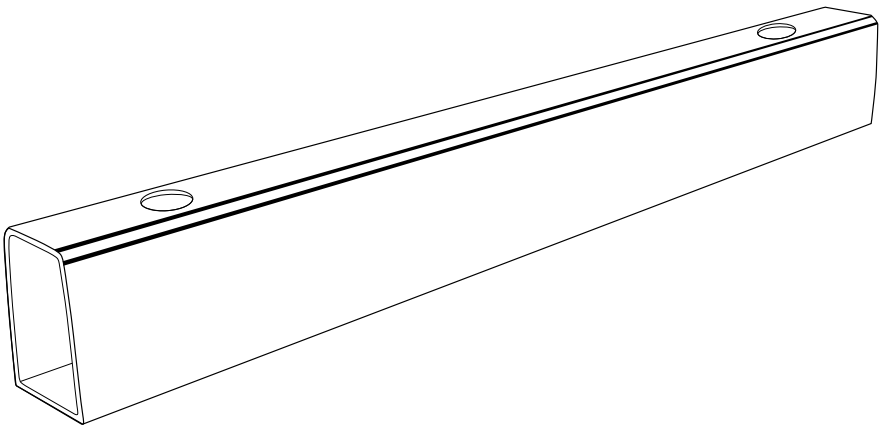

1X

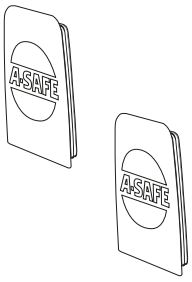


2X

2X

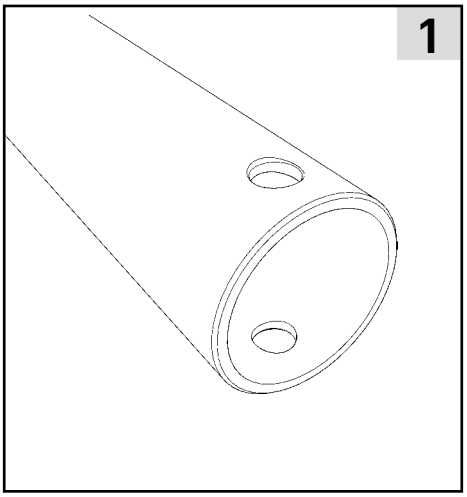
1

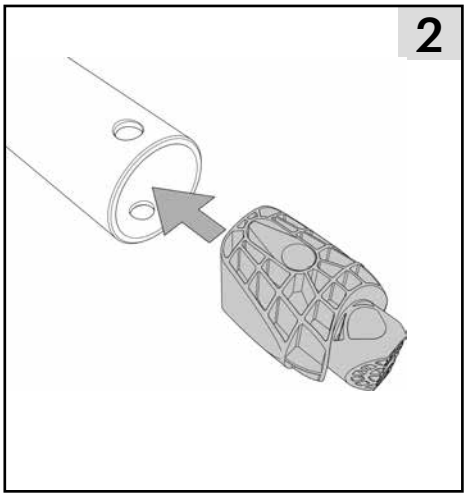
2

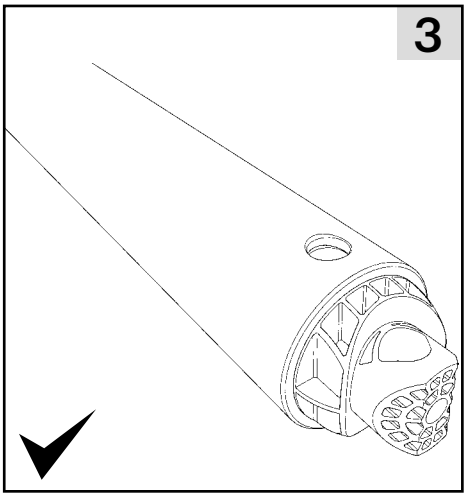
3

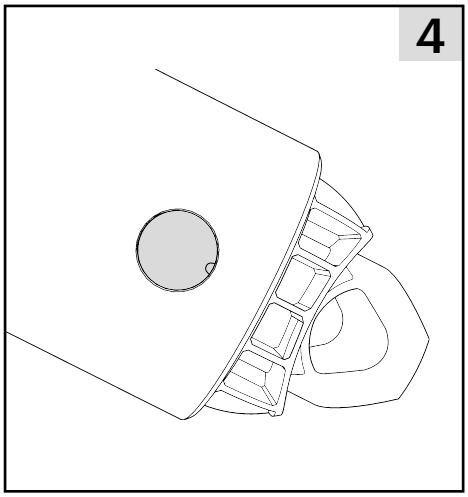
4

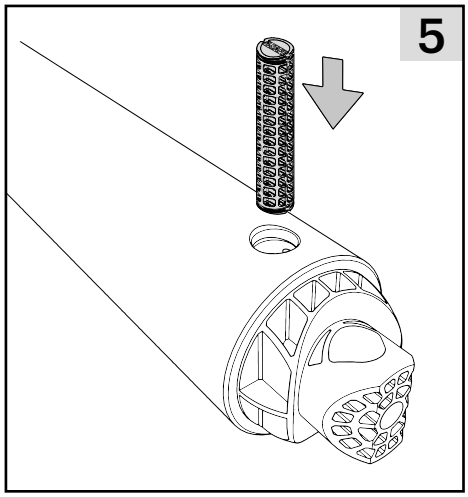
5

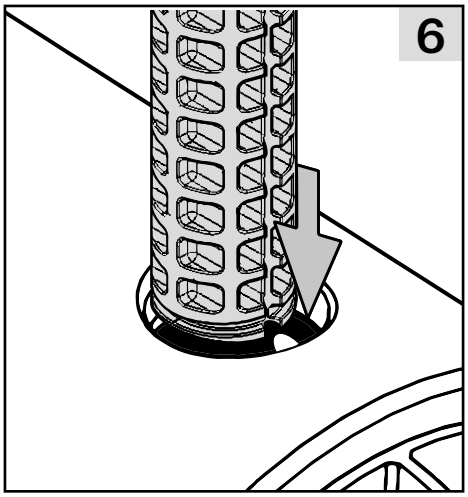
6

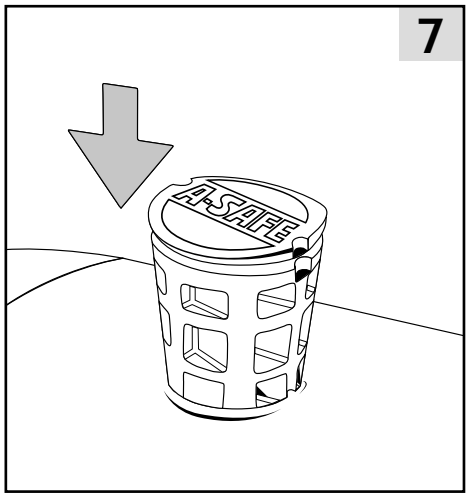
7
A-SAFE

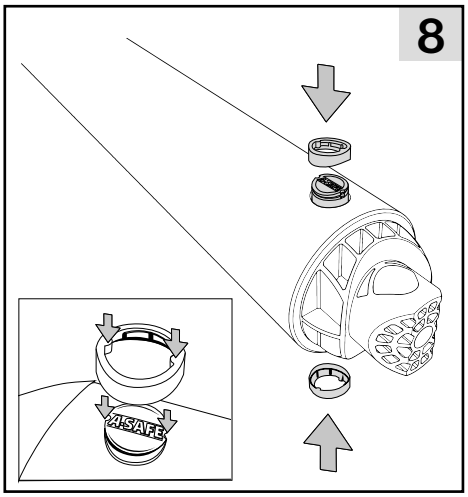
8
A-SAFE

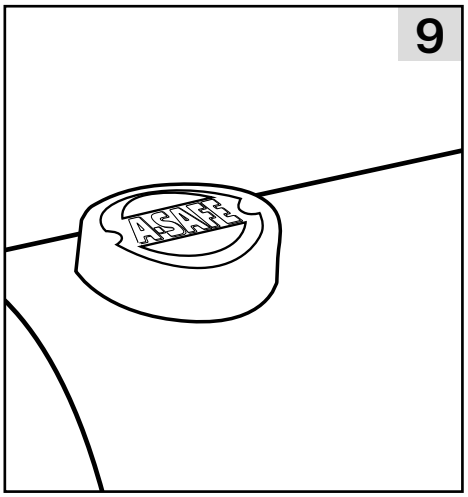
9
A-SAFE

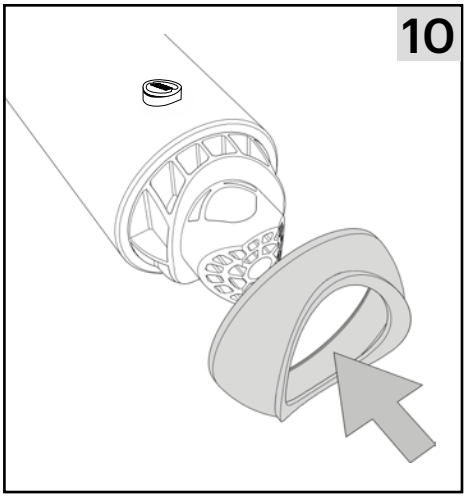
10

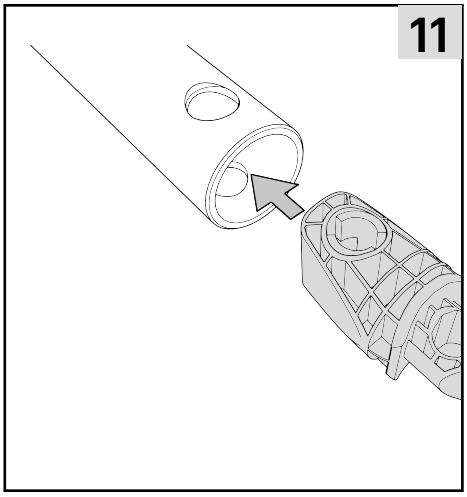
11

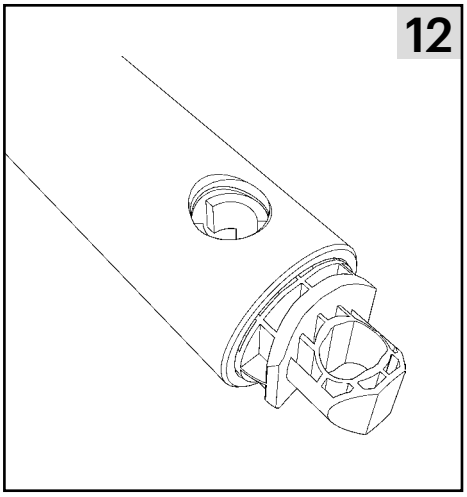
12

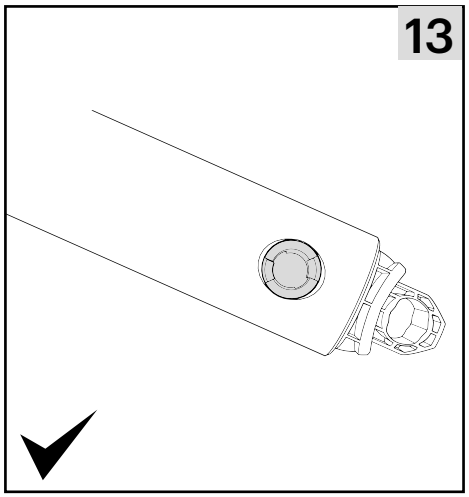
13

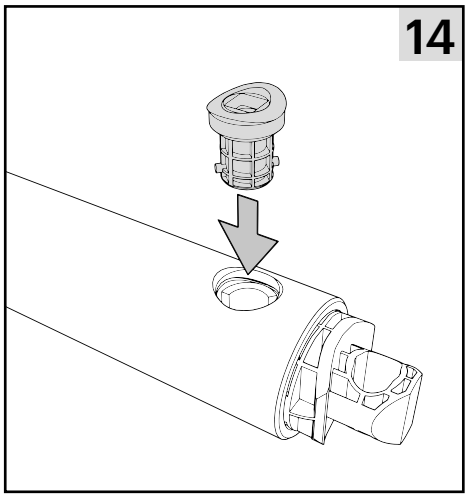
14

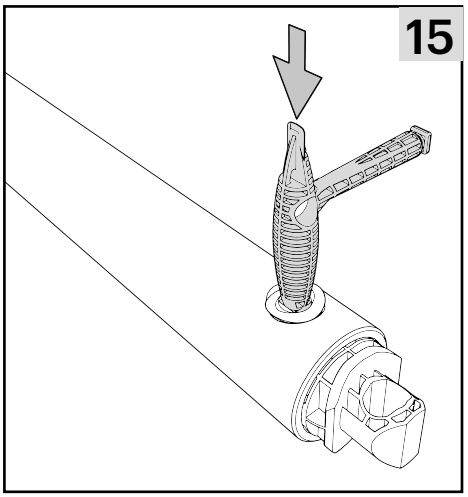
15

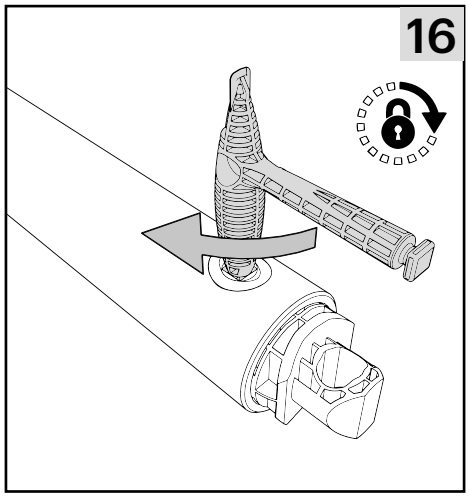
16

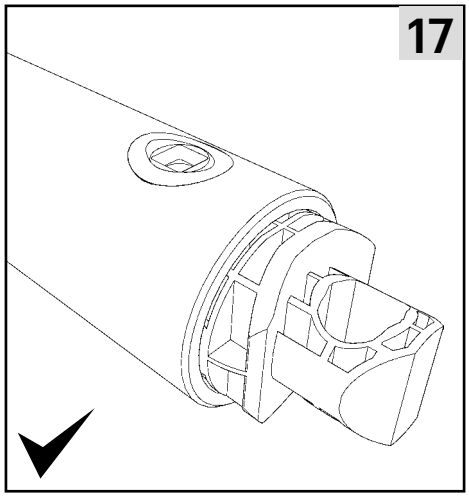
17

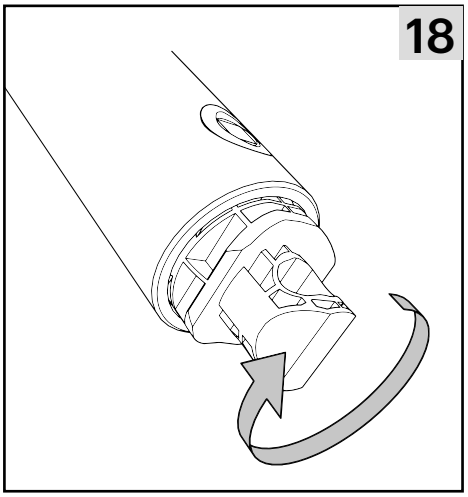
18

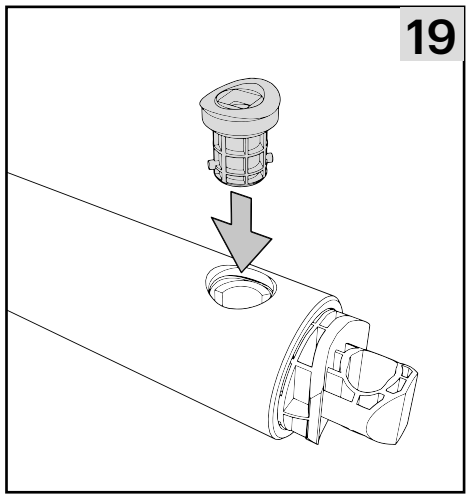
19

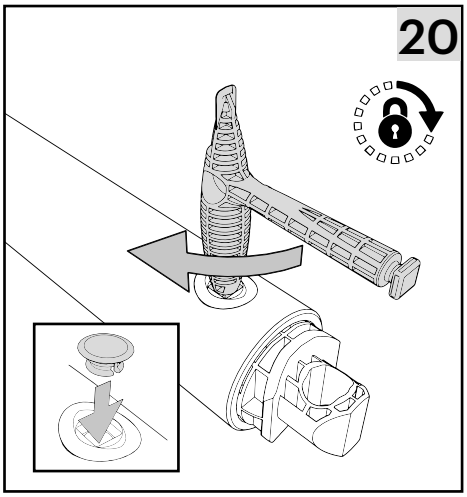
20

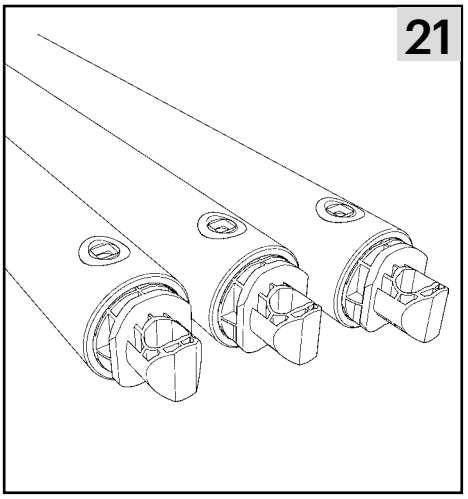
21

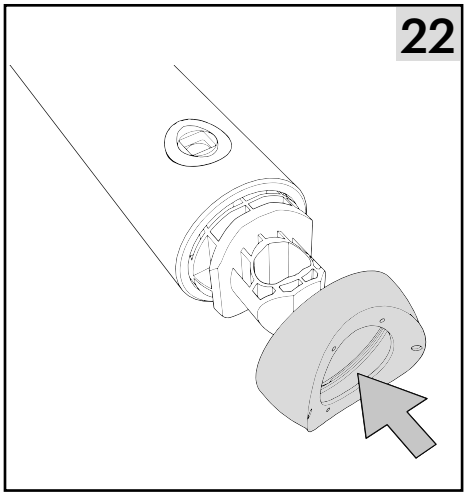
22

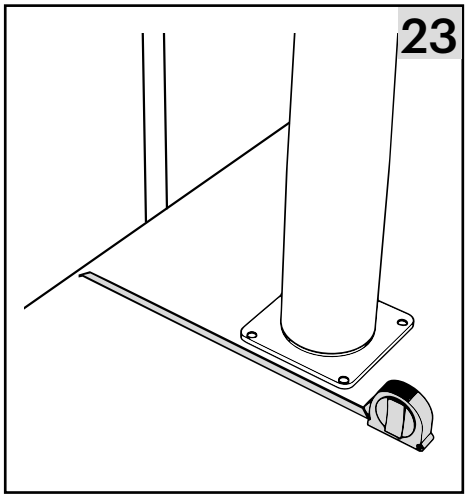
23

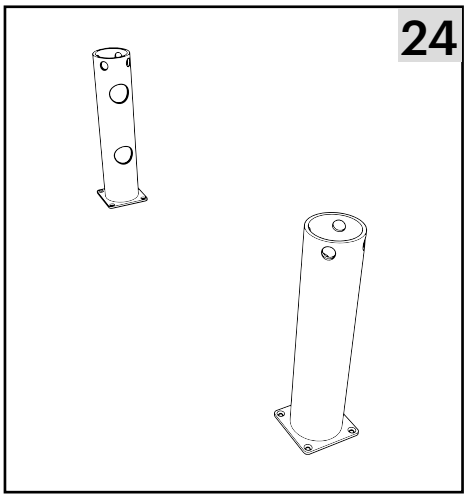
24

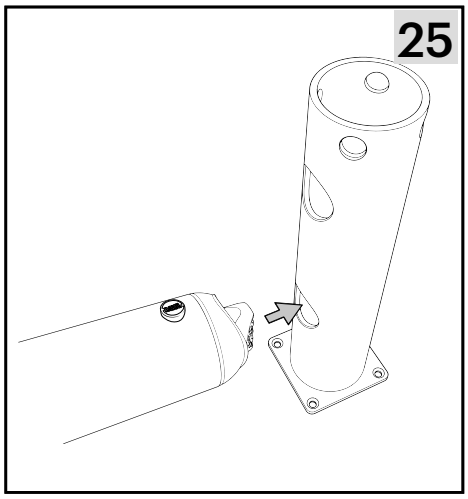
25

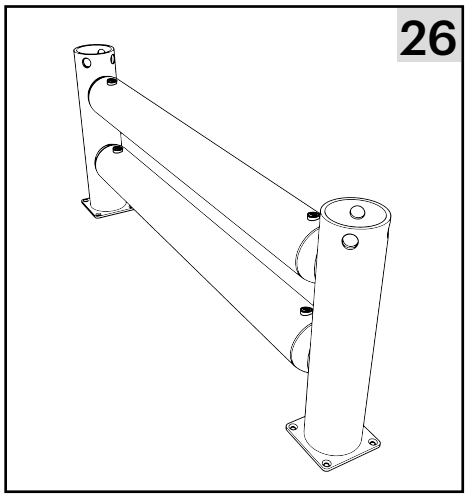
26

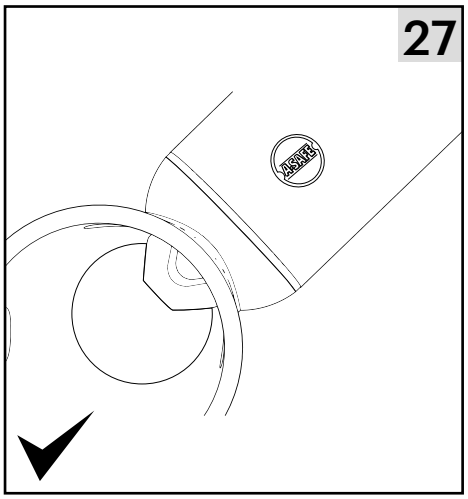
27
ASAFE

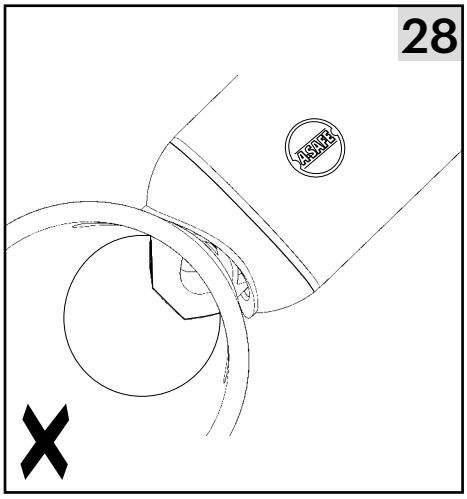
28
ASAFE

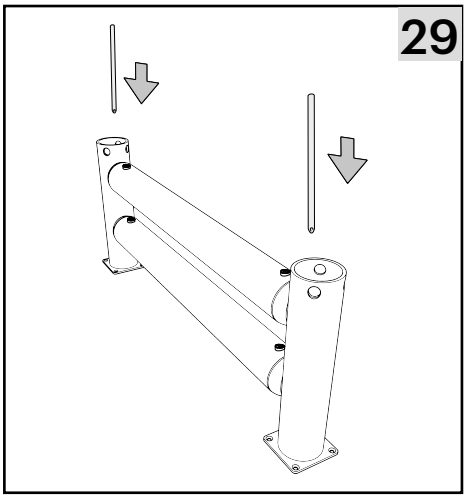
29

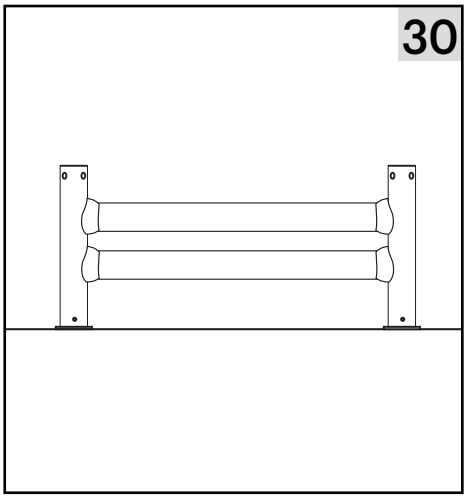
30

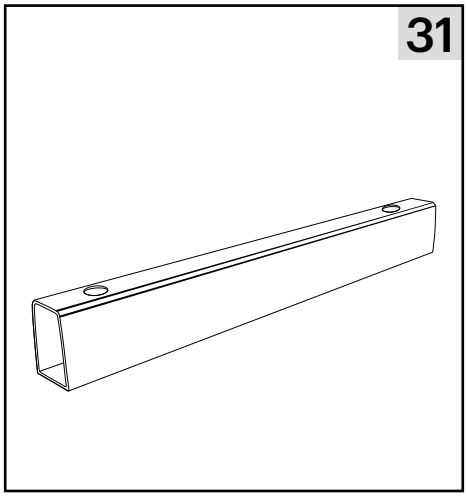
31

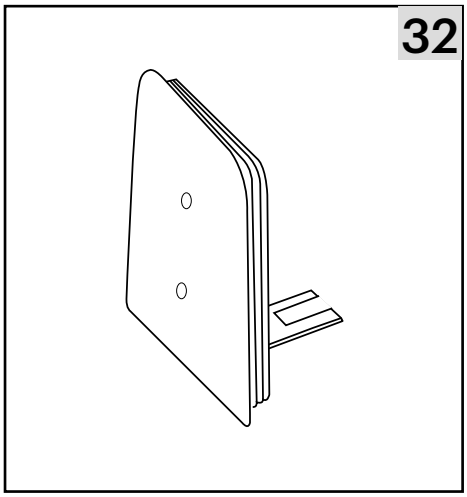
32

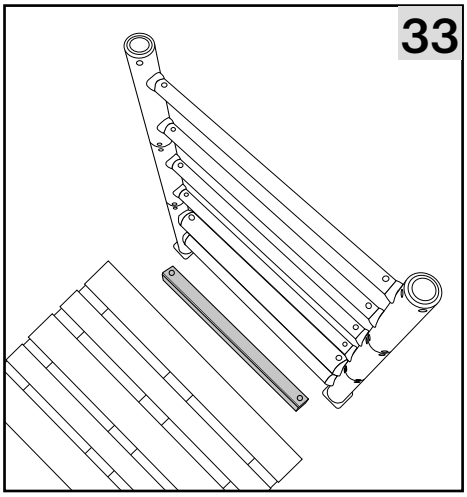
33

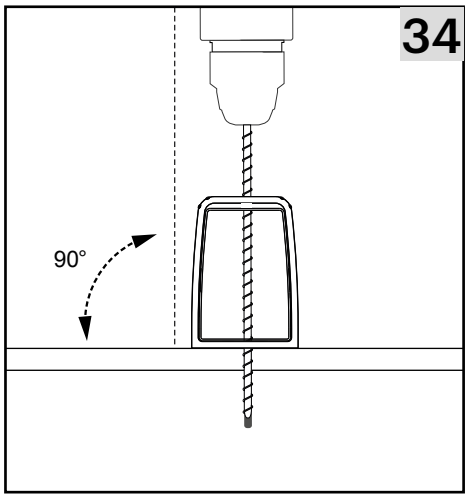
34
90°

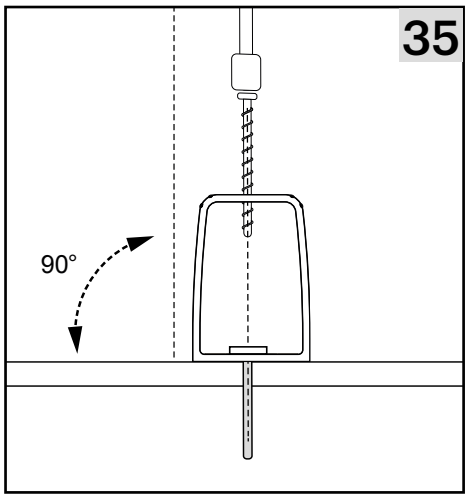
35
90°

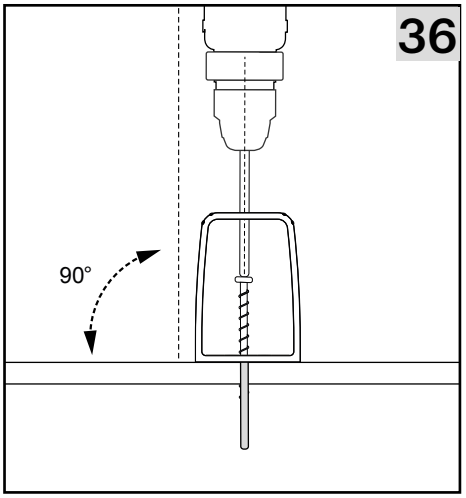
36
90°

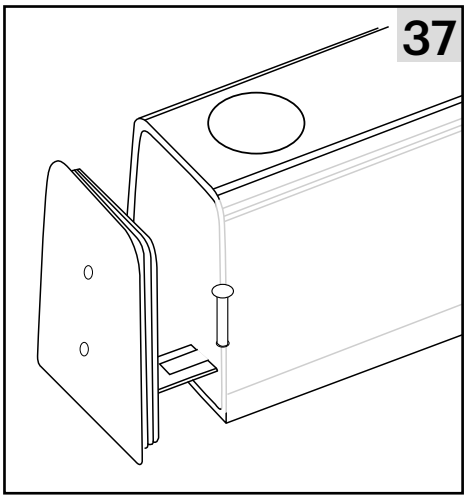
37

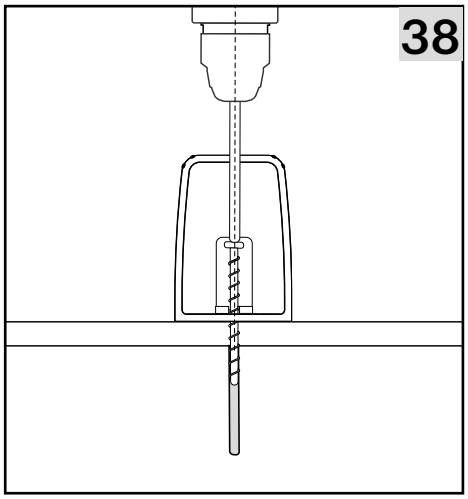
38

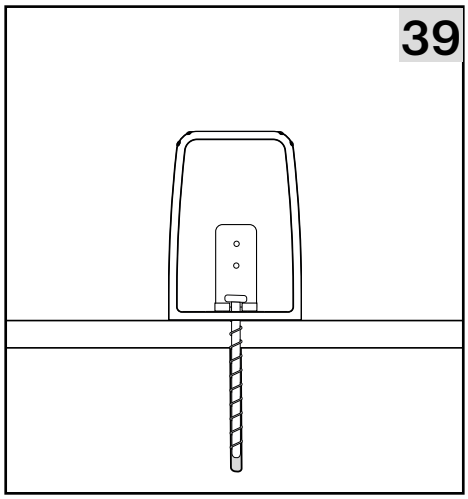
39

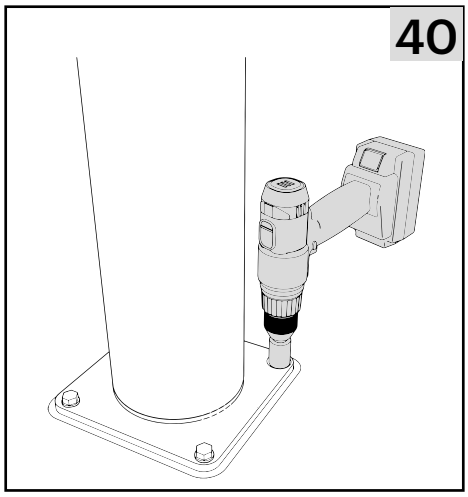
40

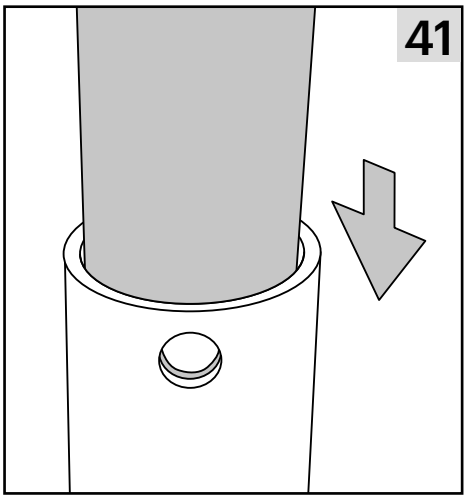
41

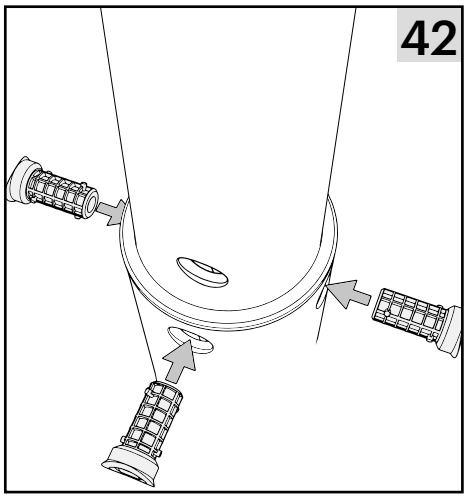
42

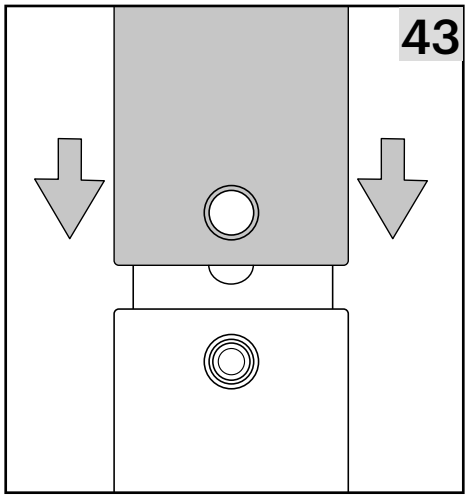
43

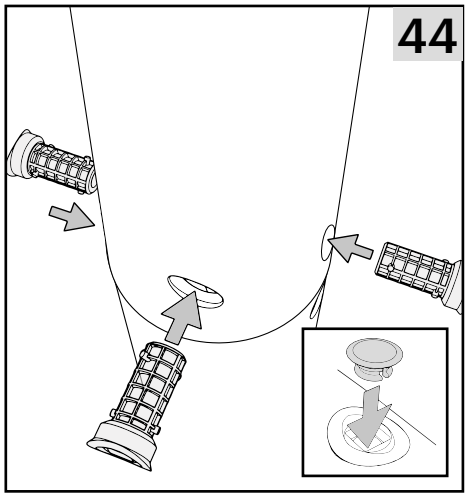
44

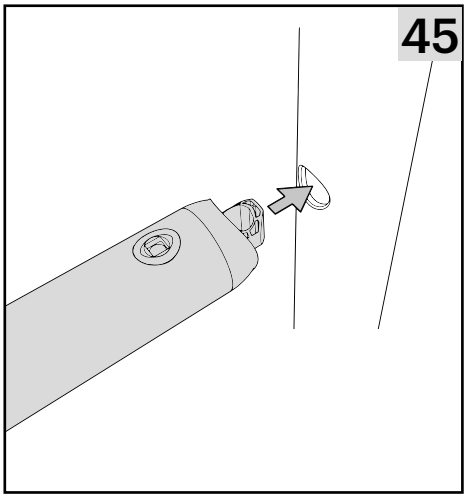
45

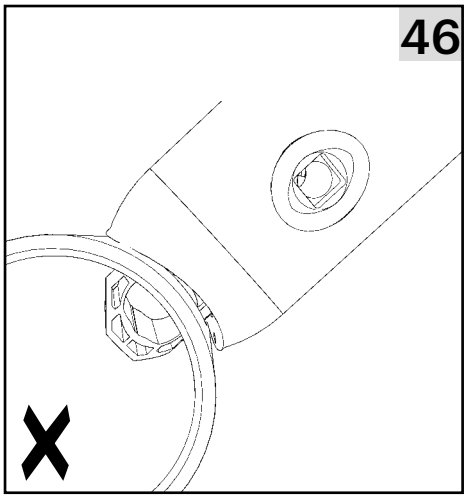
46

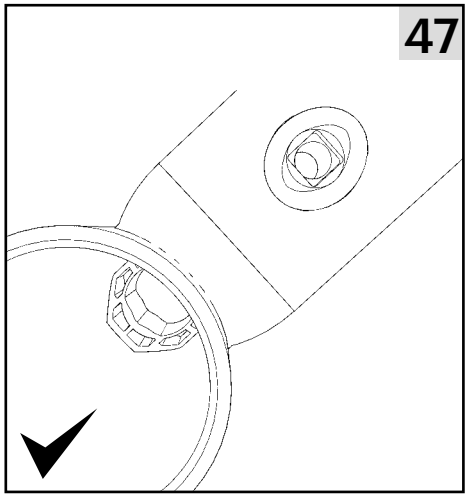
47

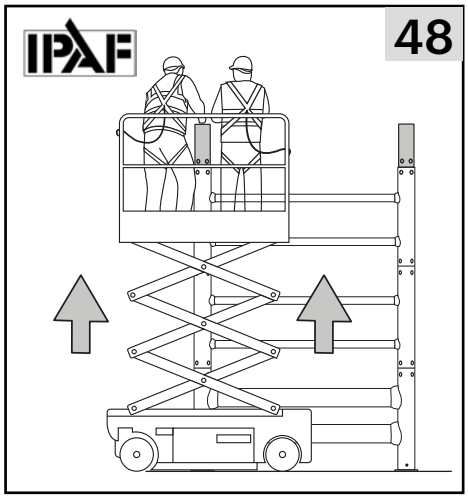
IPAF
48

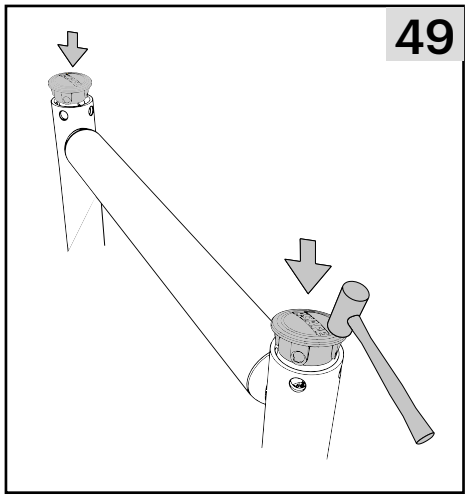
49

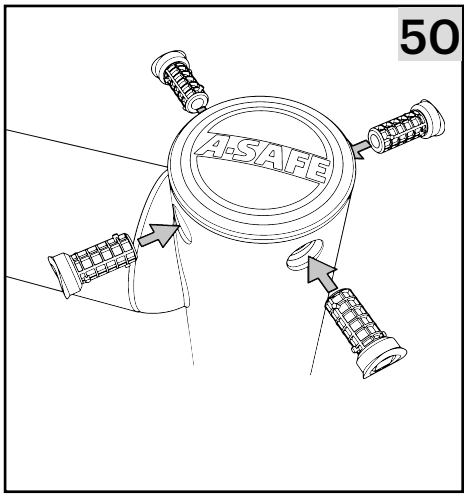
50
A-SAFE

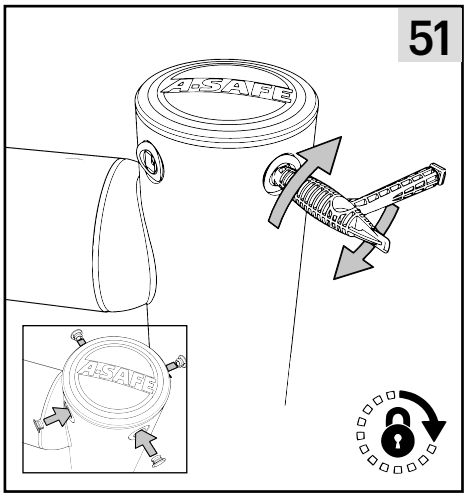
51
A-SAFE
A-SAFE

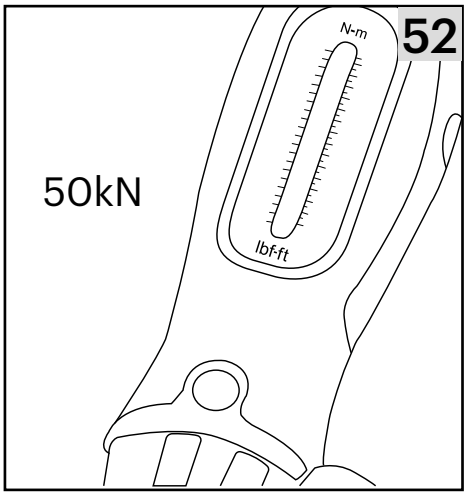
52
N-m
lbf-ft
50kN

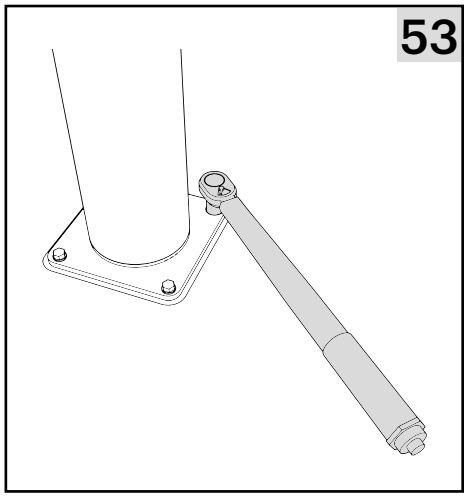
53