iFlex™

Single Traffic Guardrail+

www.asafe.com

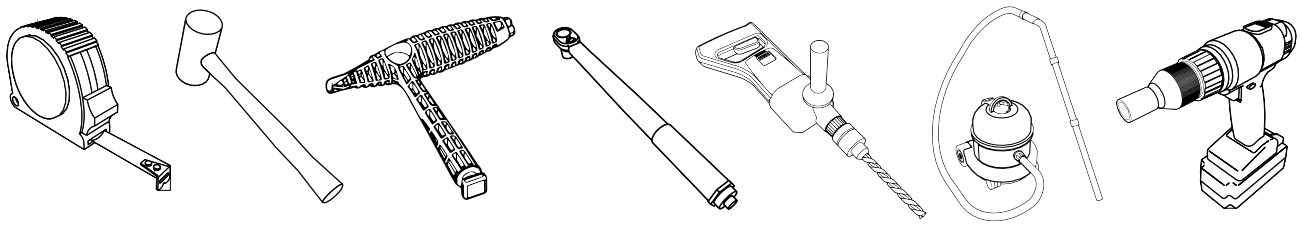

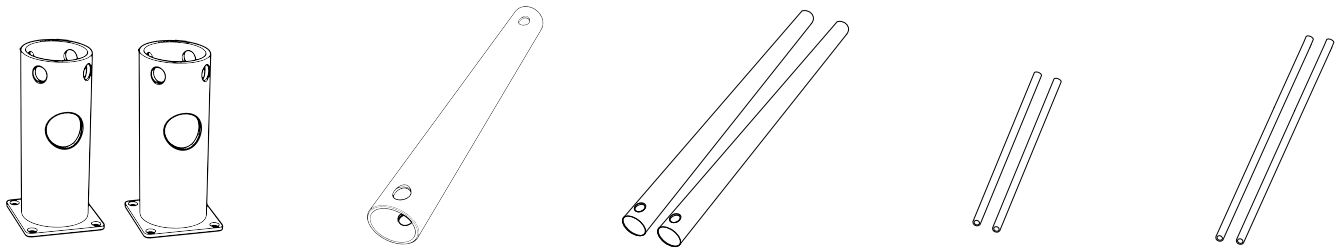

2X 1X 2X 2X 2X

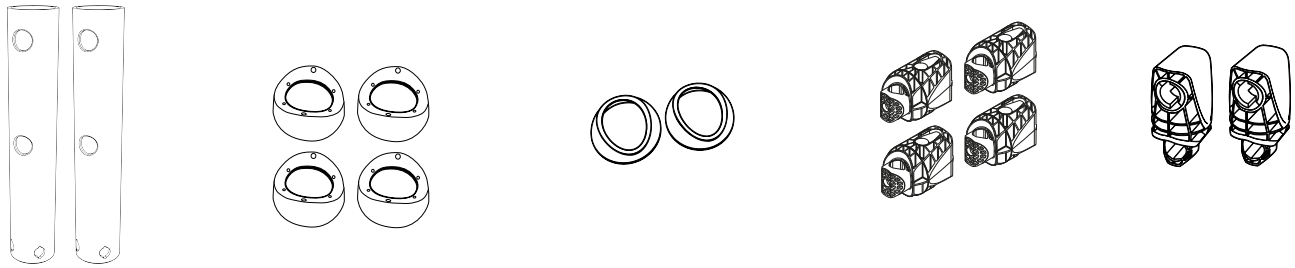

2X 4X 2X 4X 2X

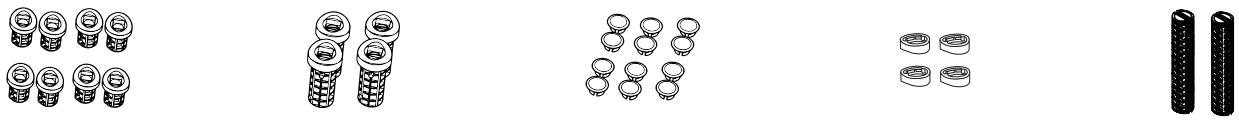

8X 4X 12X 4X 2X

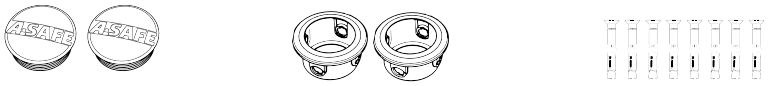

2X 2X 8X

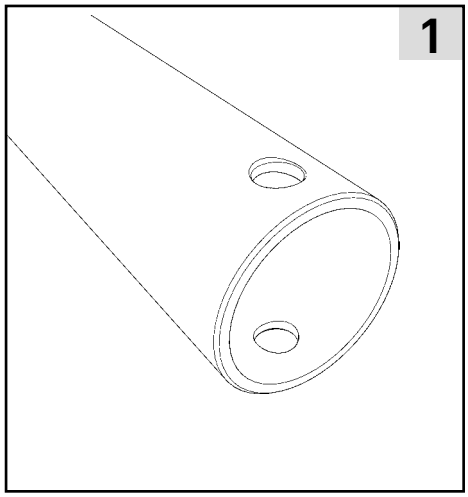
1

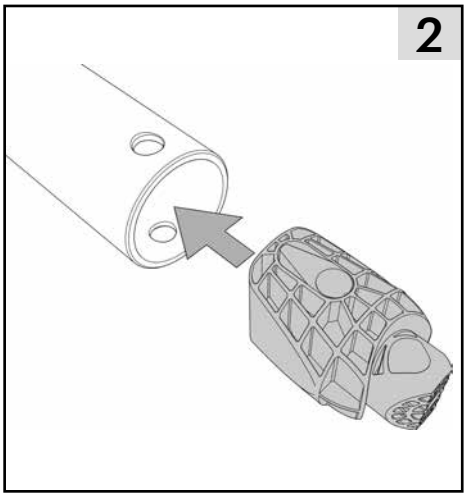
2

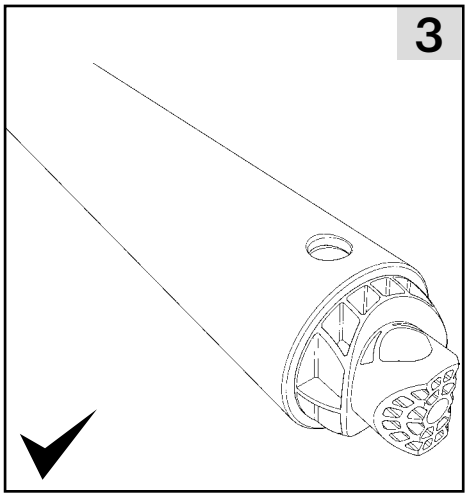
3

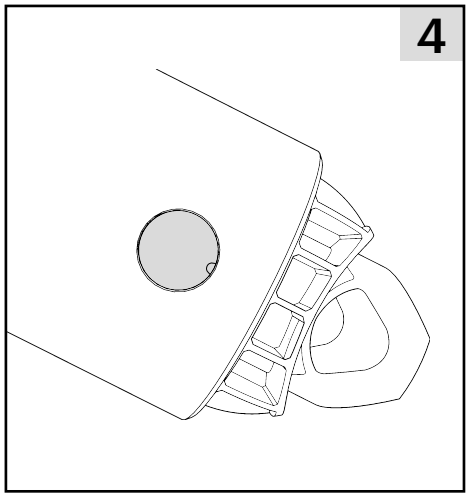
4

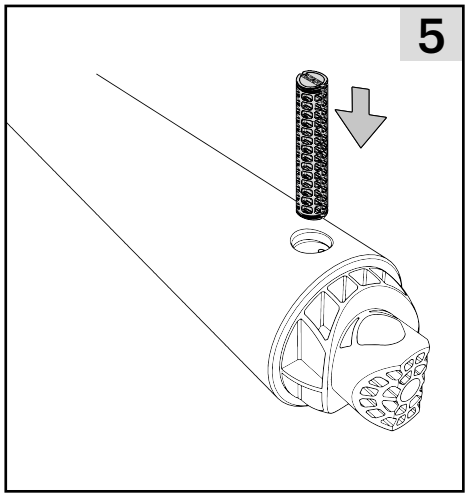
5

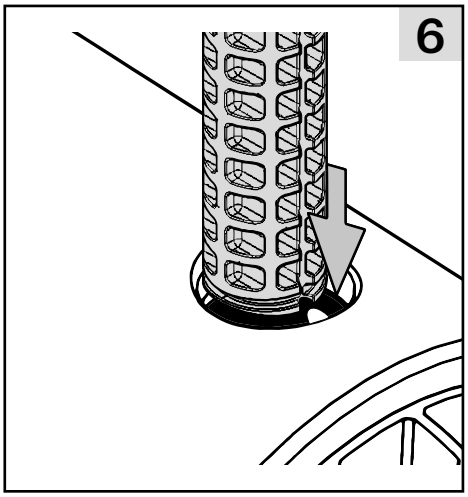
6

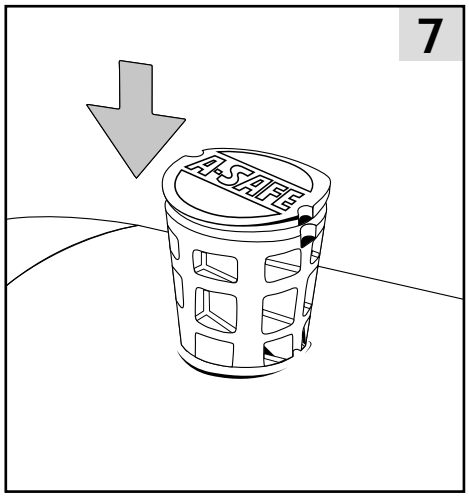
7
A-SAFE

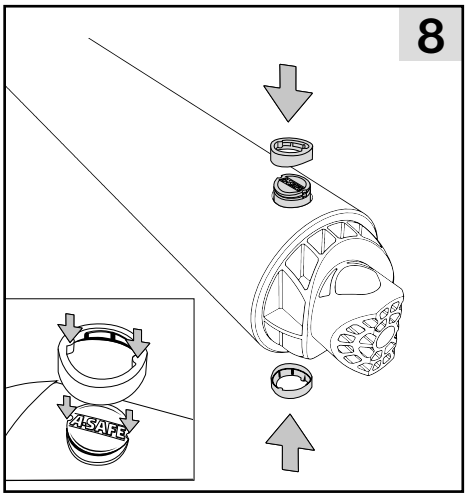
8
A-SAFE

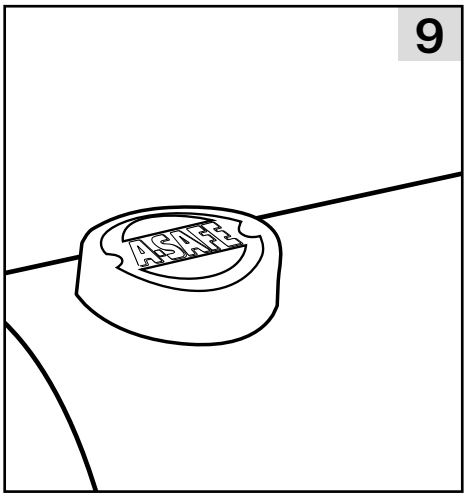
9
A-SAFE

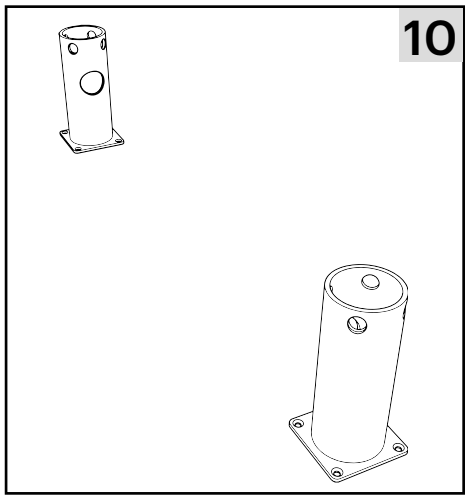
10

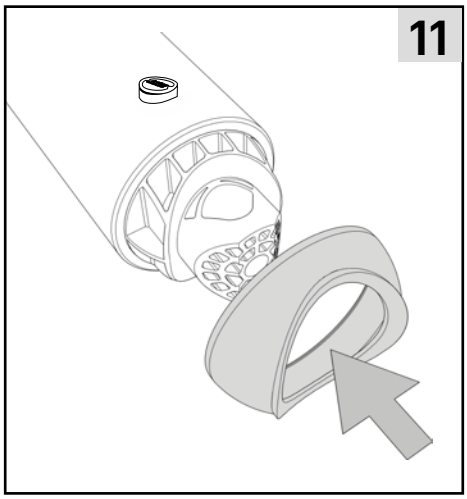
11

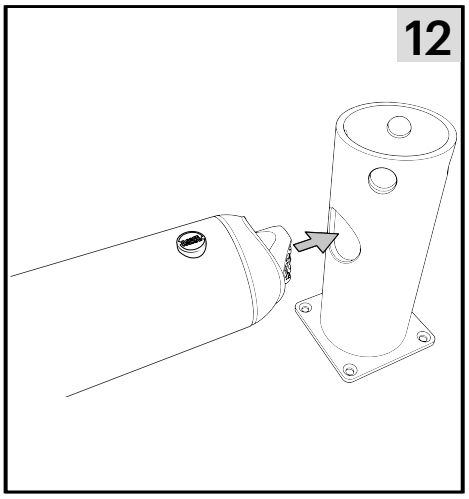
12

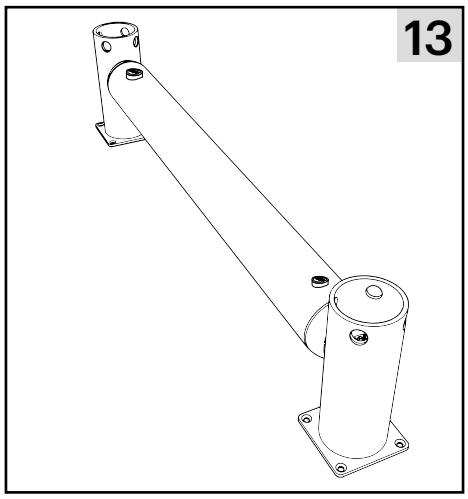
13

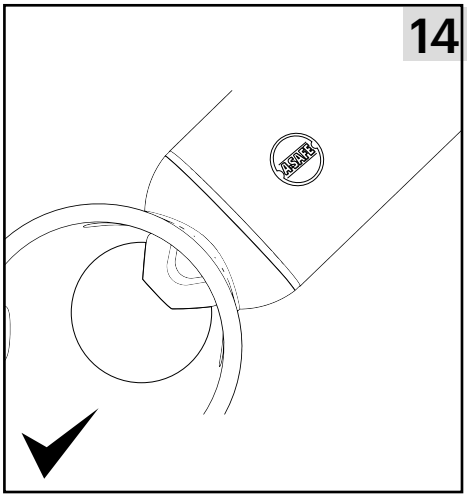
14
ASHLEY

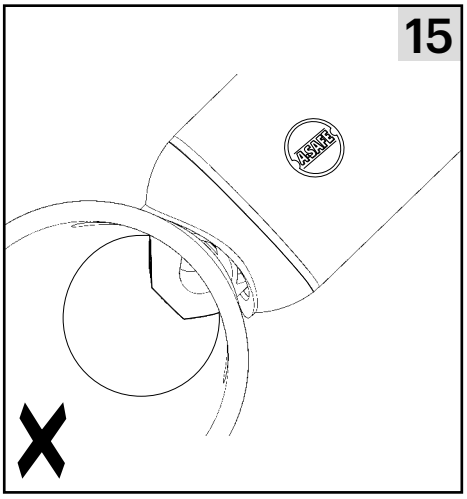
15
ASHLEY

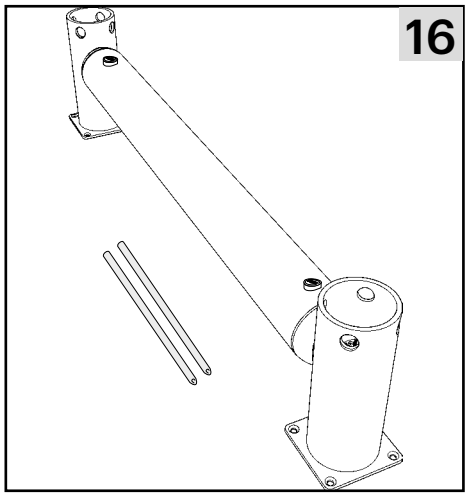
16

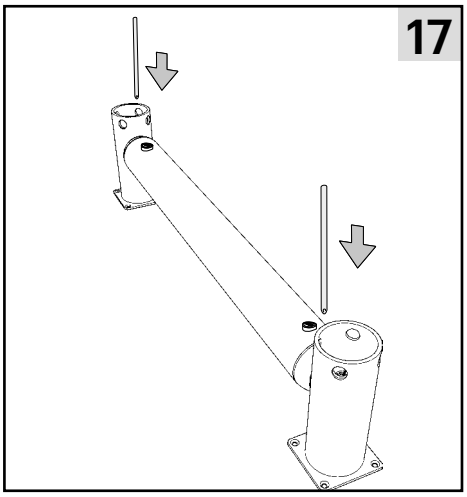
17

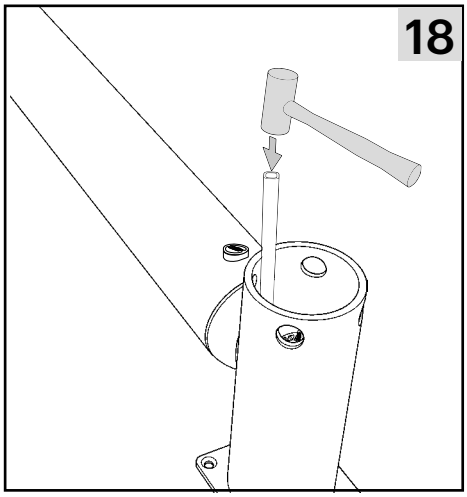
18

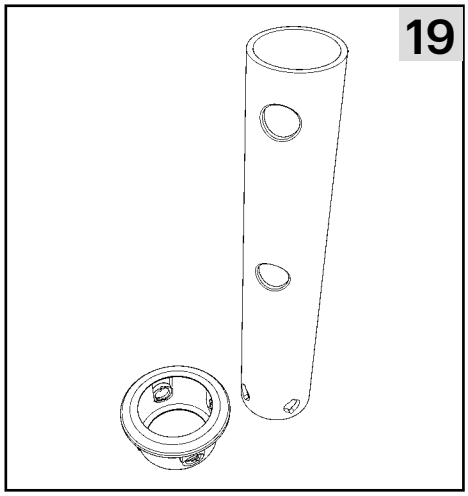
19

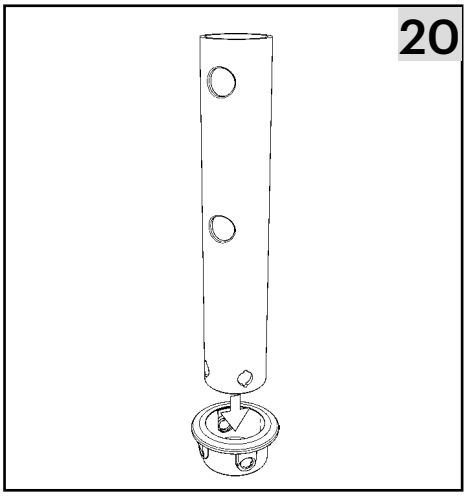
20

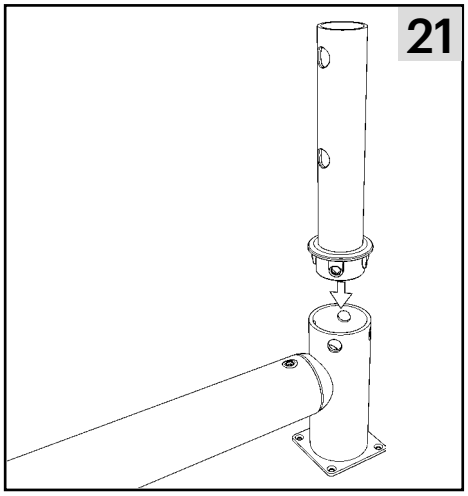
21

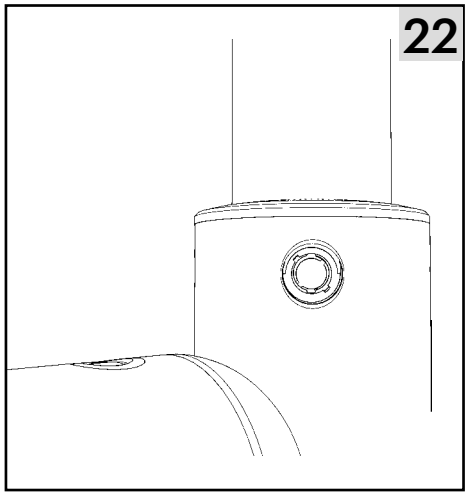
22

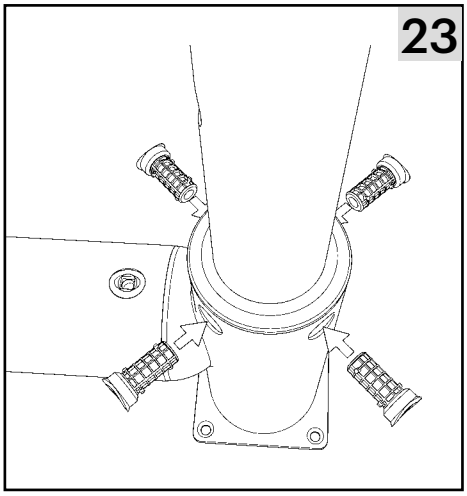
23

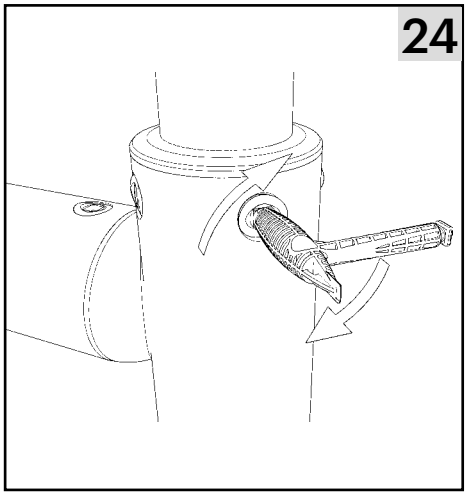
24

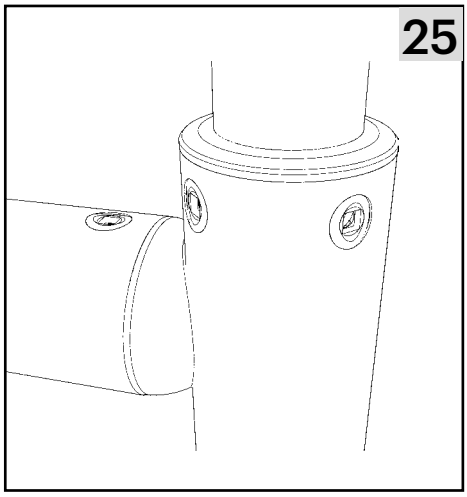
25

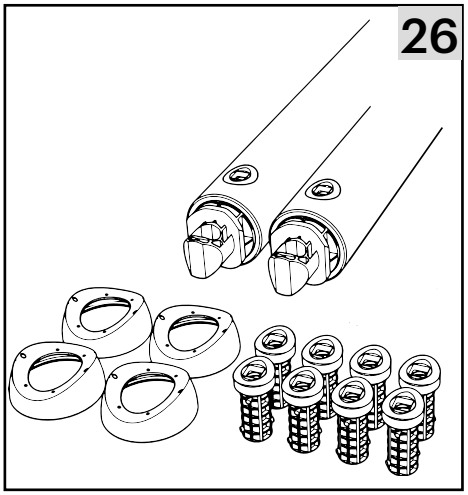
26

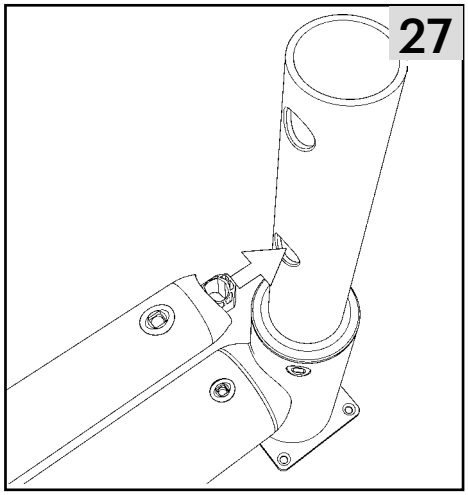
27

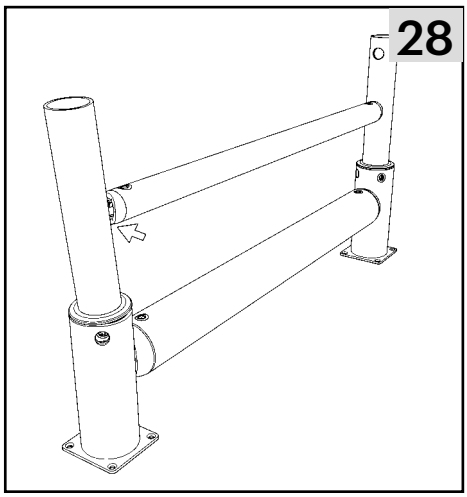
28

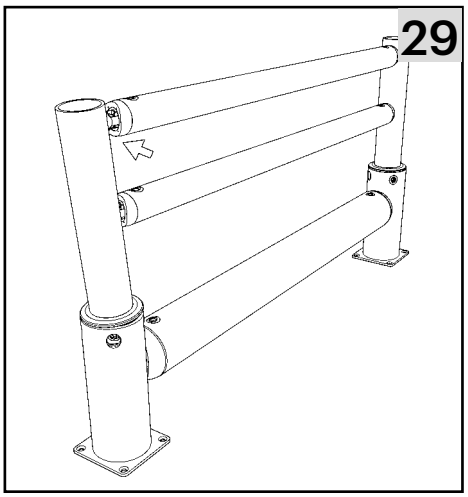
29

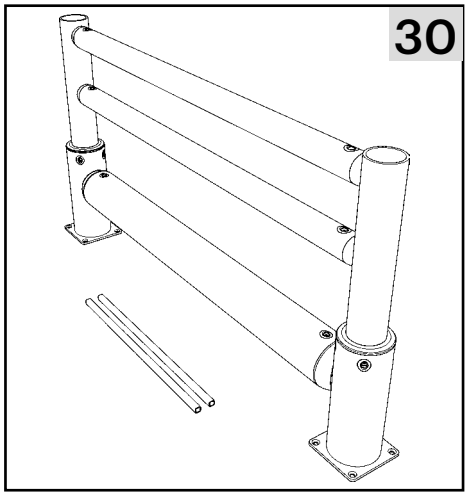
30

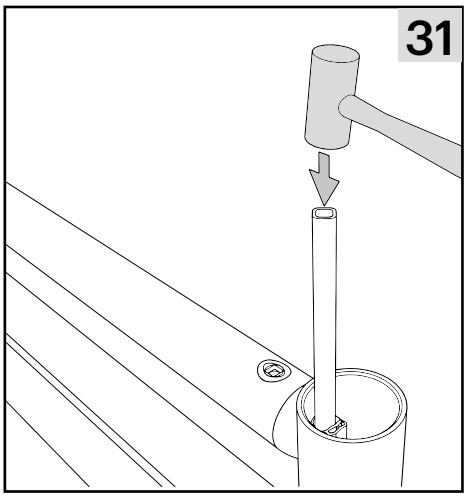
31

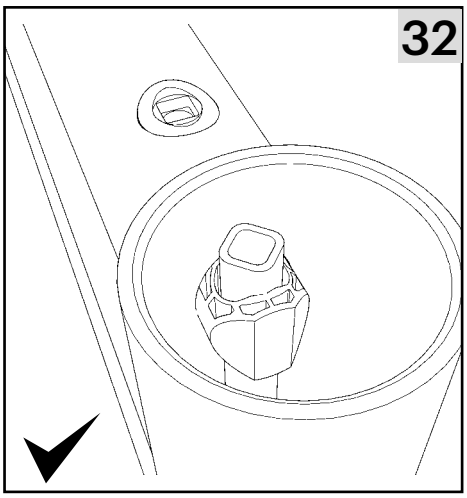
32

33
SAFE

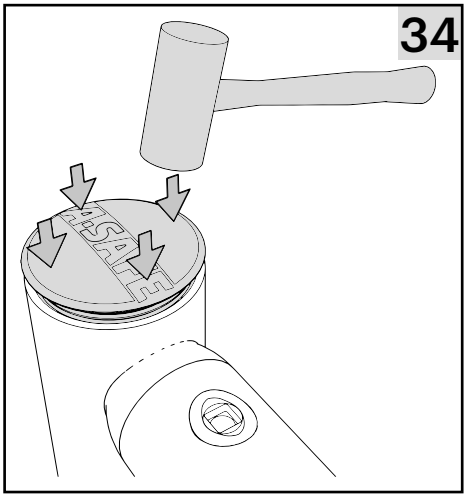
34
SAFE

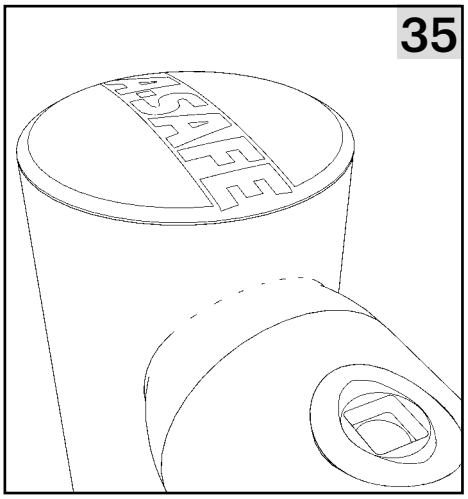
35
SAFE

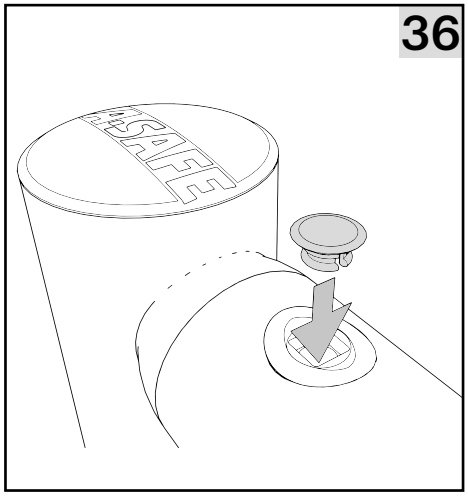
36
SAFE

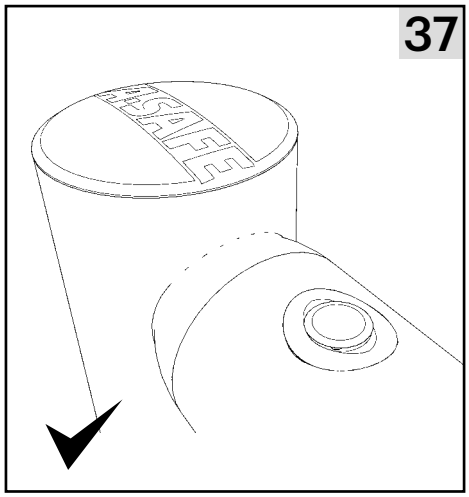
37
SAFE

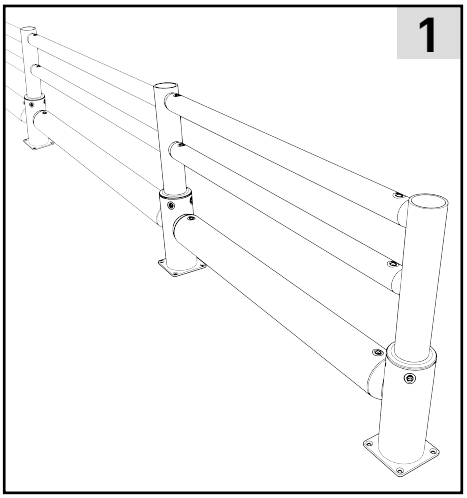
1

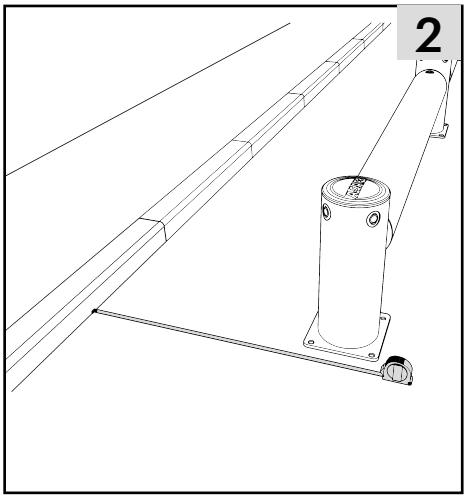
2

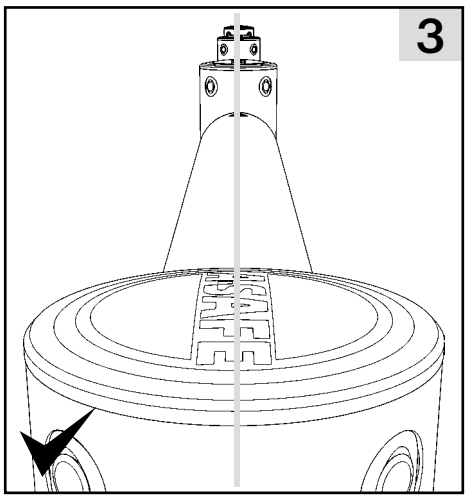
3

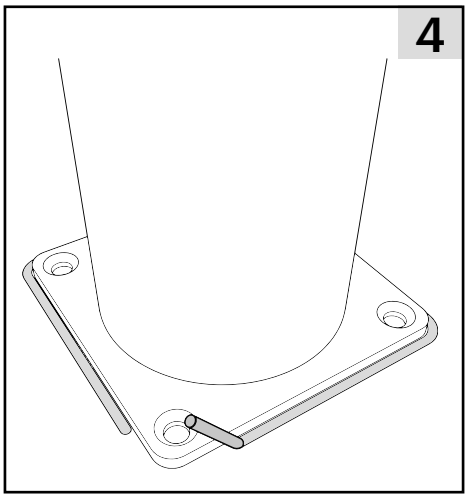
4

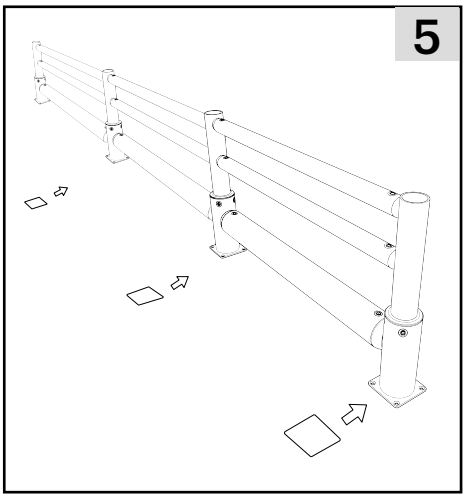
5

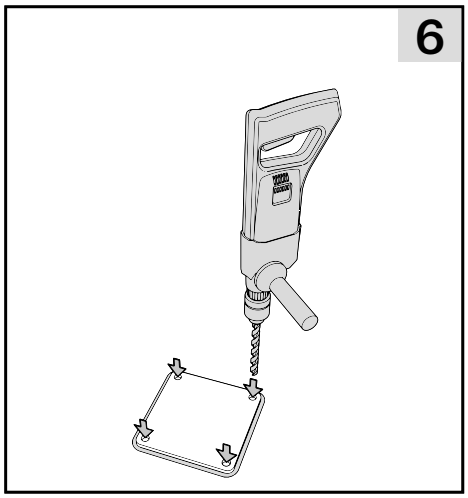
6

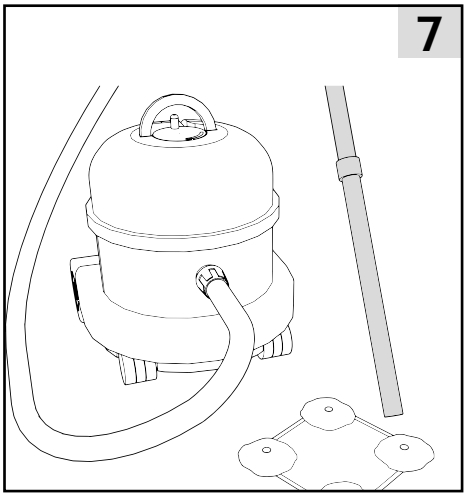
7

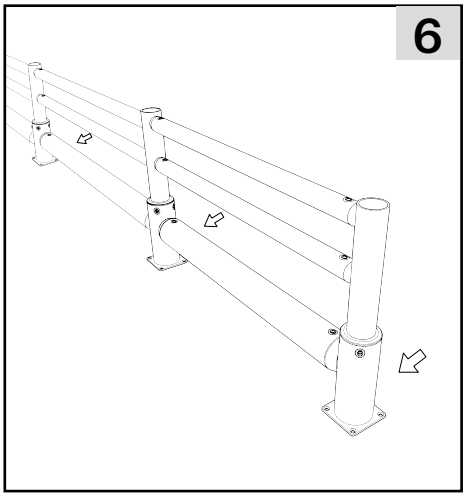
6

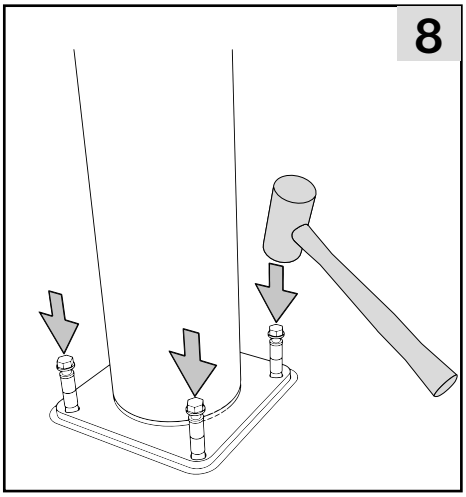
8

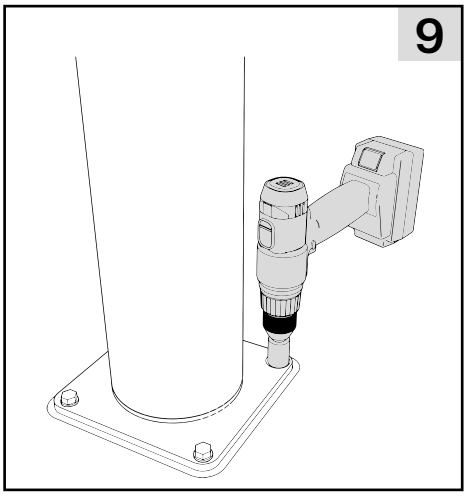
9

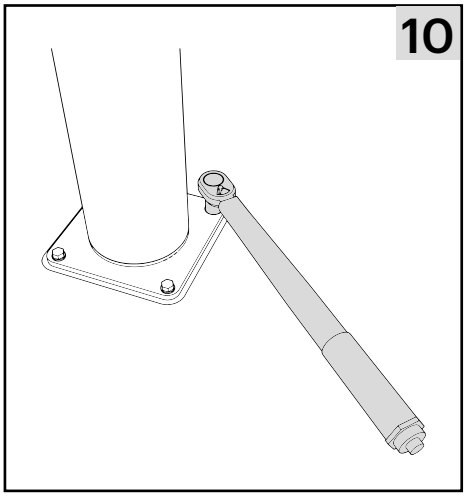
10

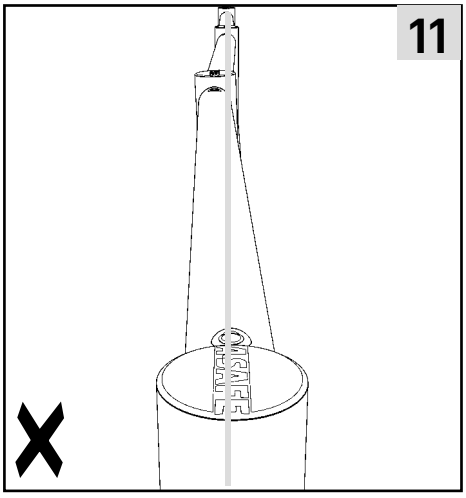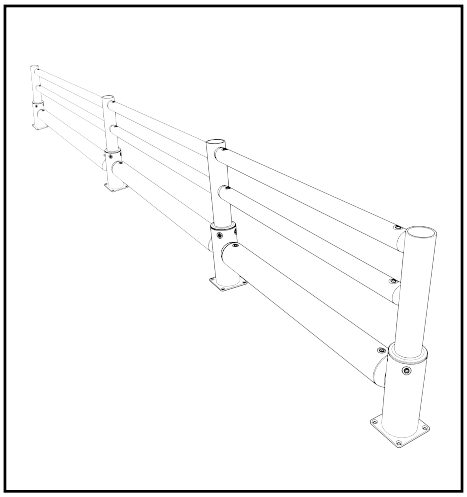
11