eFlex™

Double RackEnd Guardrail with iFlex™ ForkGuard™

www.asafe.com

eFlex™ Double RackEnd Guardrail

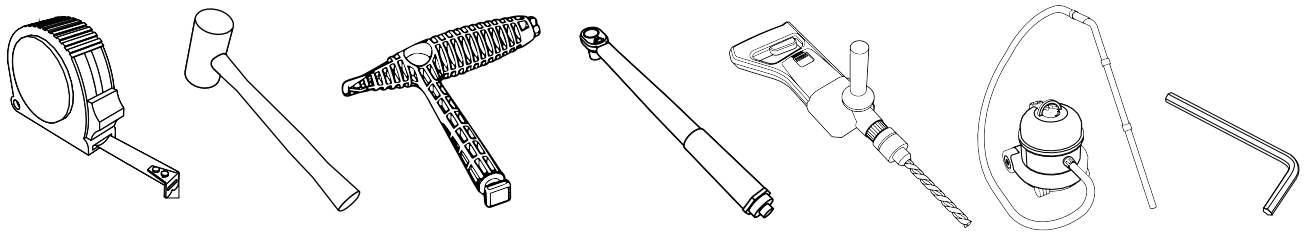

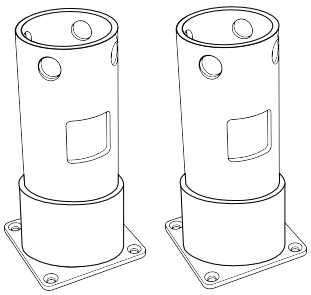

2X

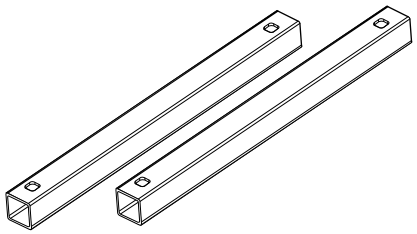

2X

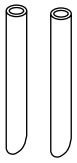

2X

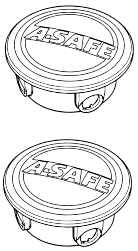

2X

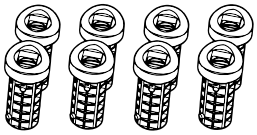

8X

8X

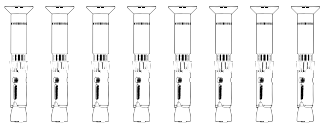

8X

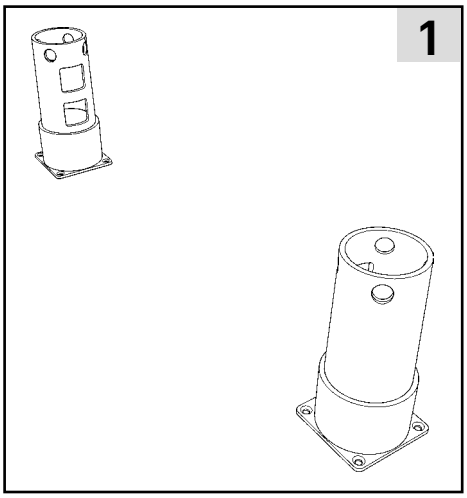
1

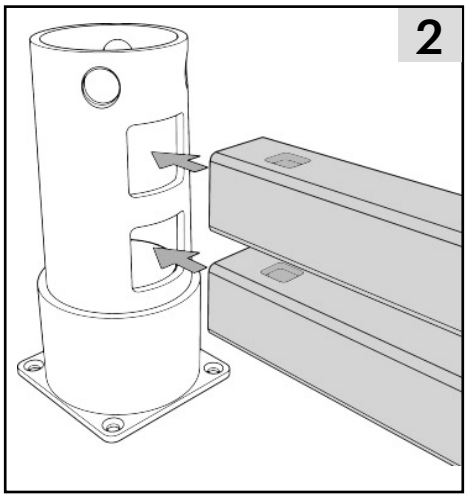
2

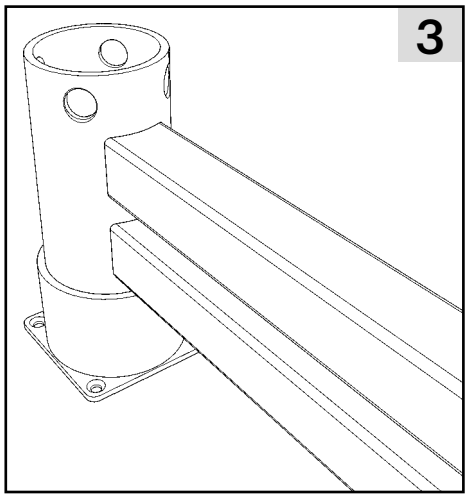
3

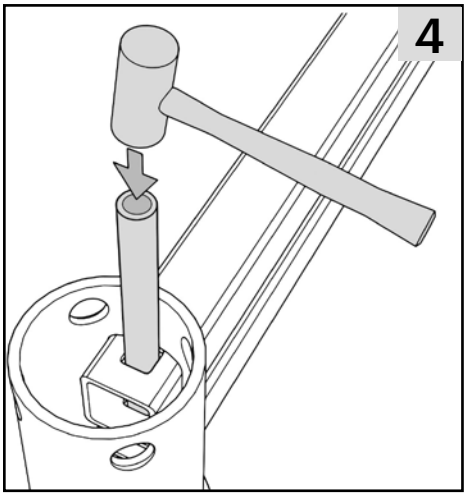
4

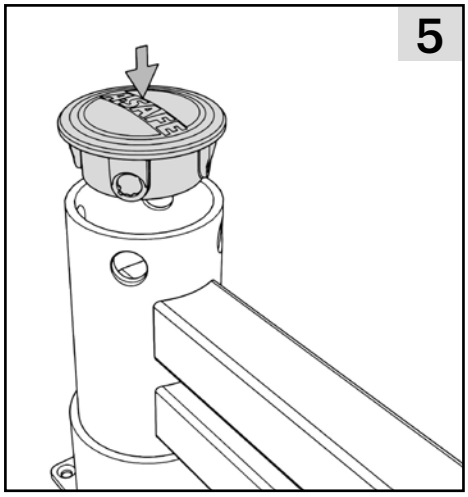
5
A-SAFE

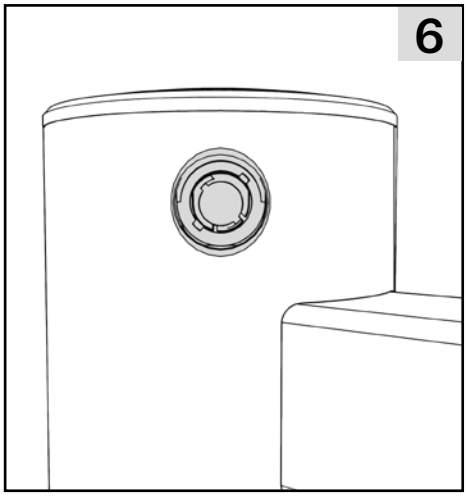
6

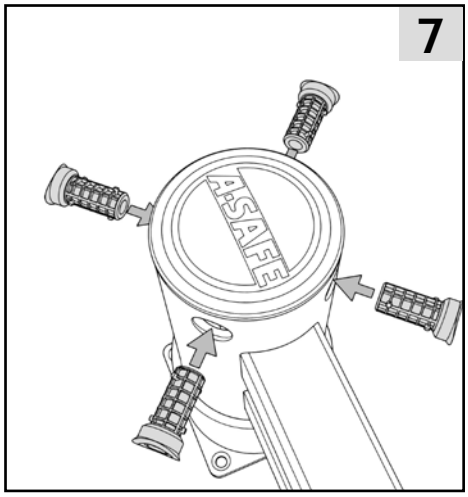
7
A-SAFE

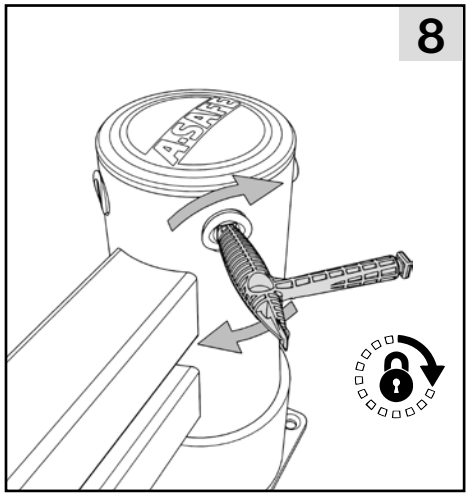
8
A-SAFE

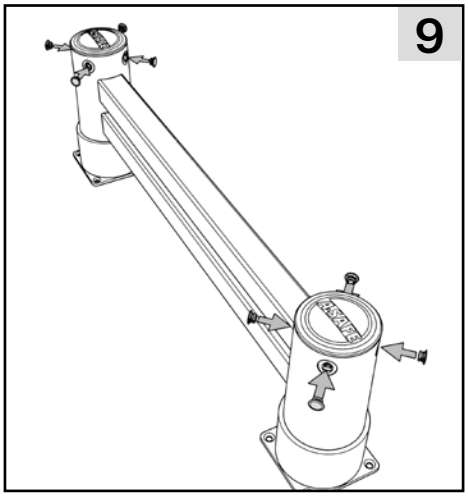
9
A-SAFE

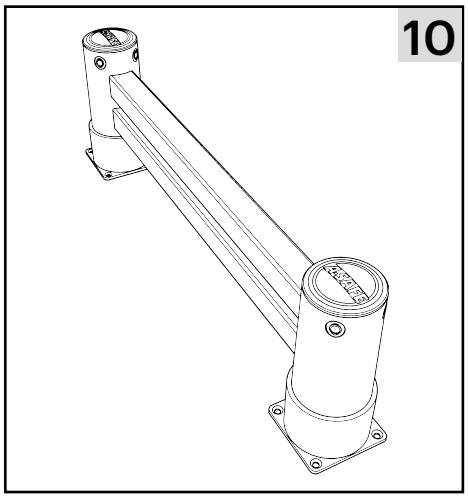
10
A-SAFE

iFlex ForkGuard Kerb Guardrail

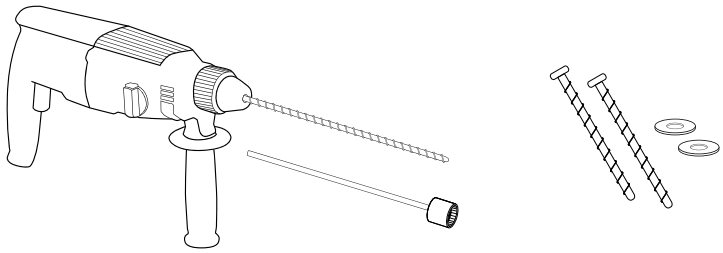

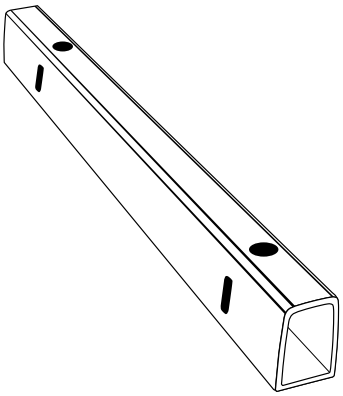

1X

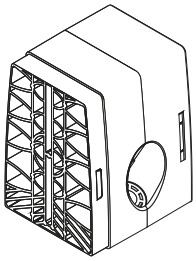

2-26X

2X

2X

2X

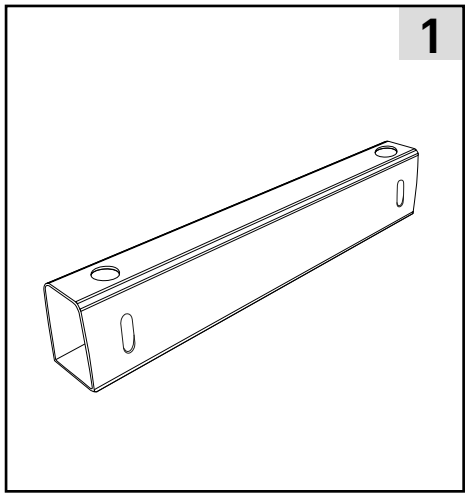
1

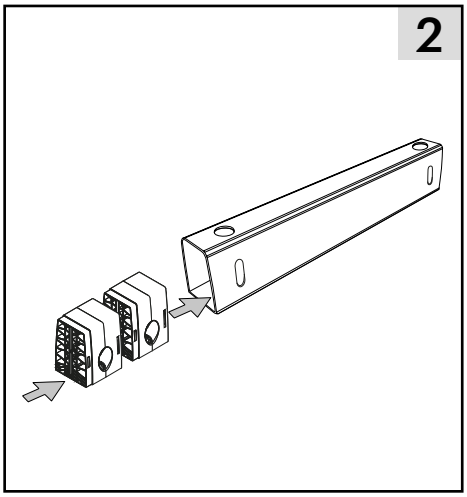
2

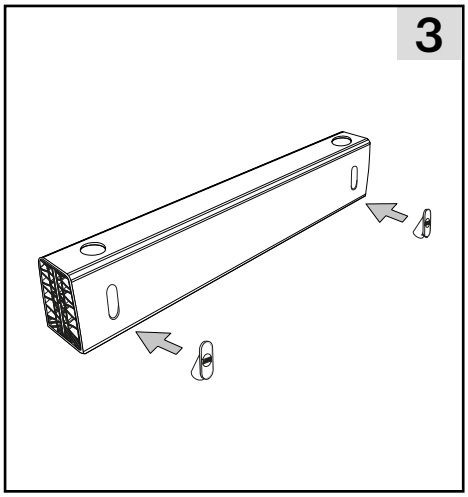
3

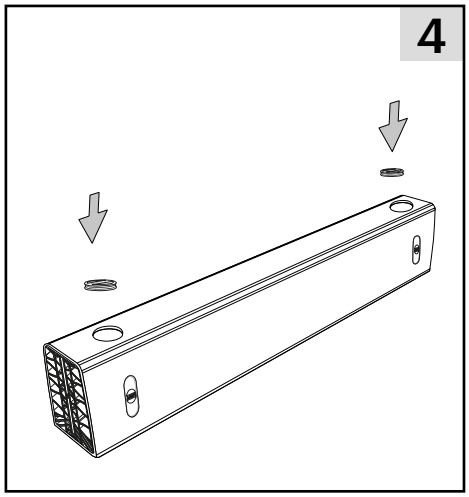
4

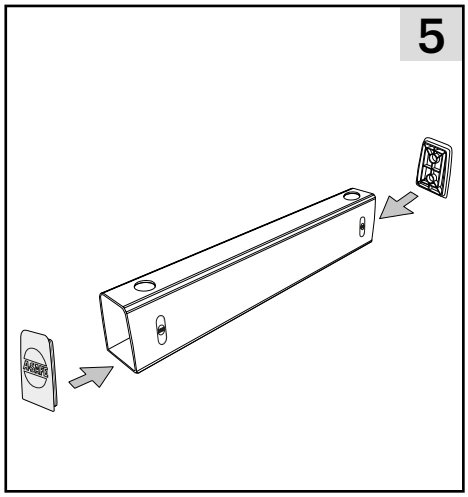
5

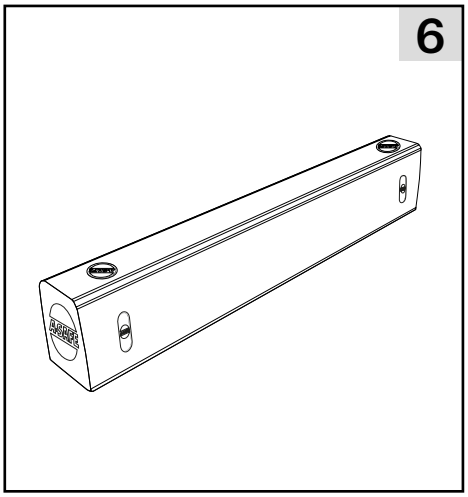
6

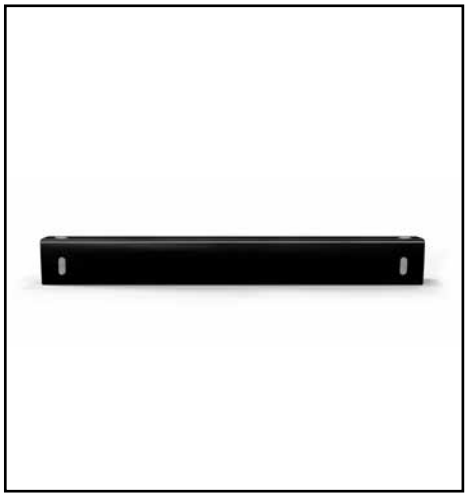

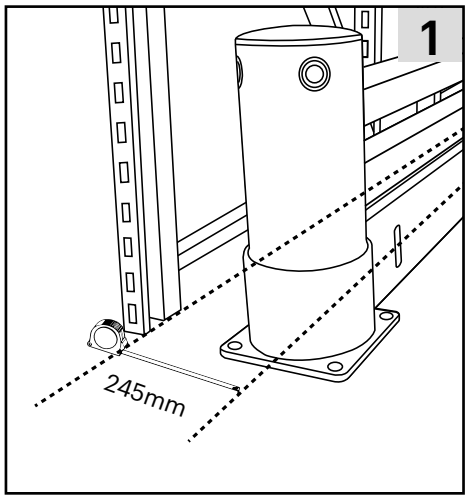
1
245mm

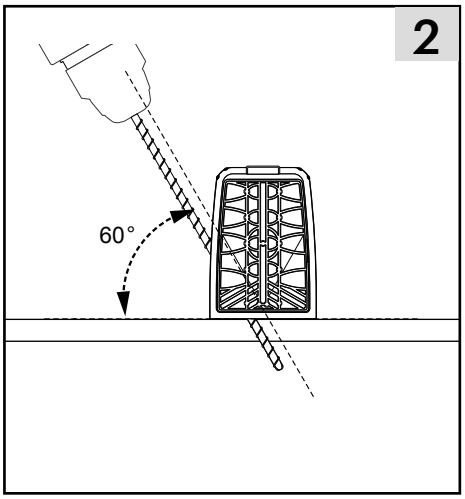
2
60°

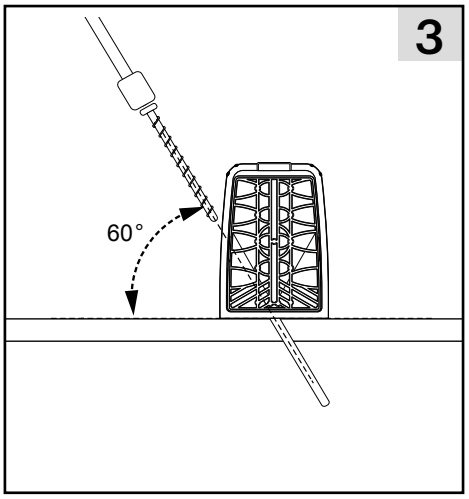
3
60°

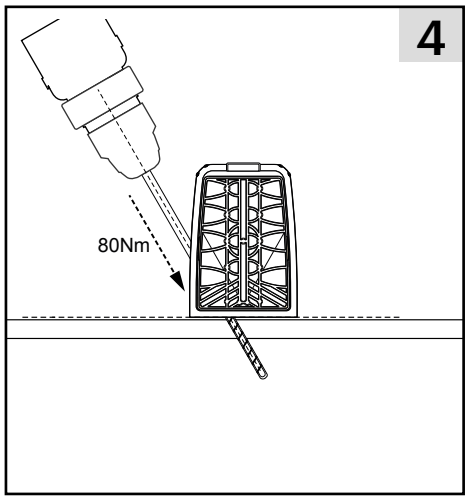
4
80Nm

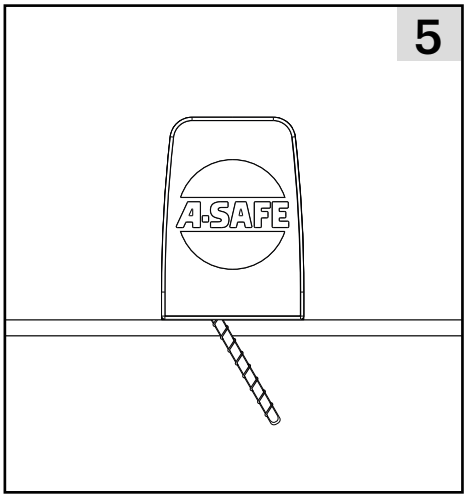
5
A-SAFE

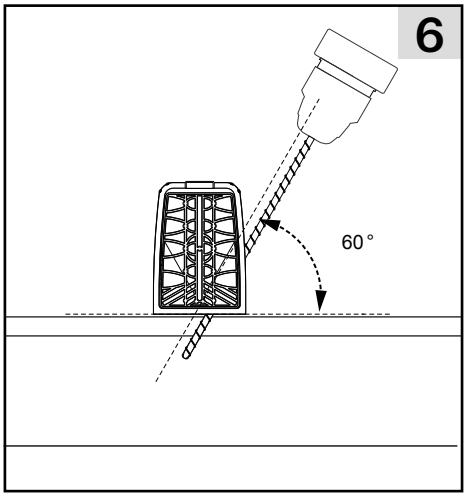
6
60°

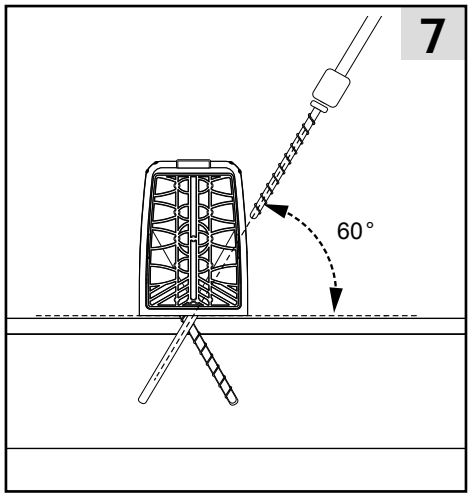
7
60°

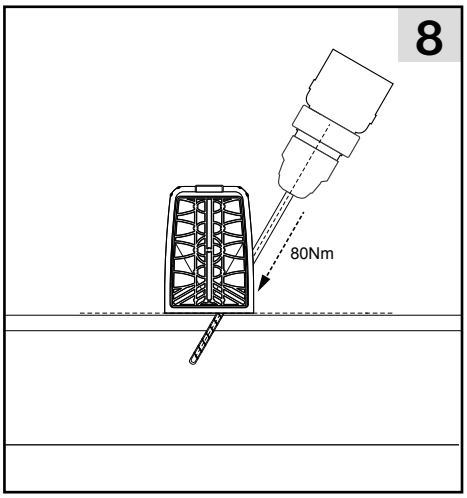
8
80Nm

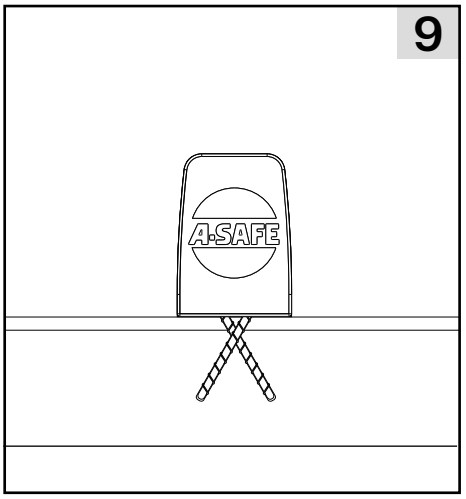
9
A-SAFE

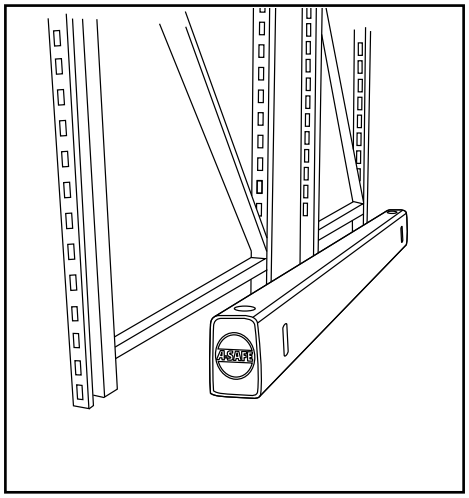
A-SAFE

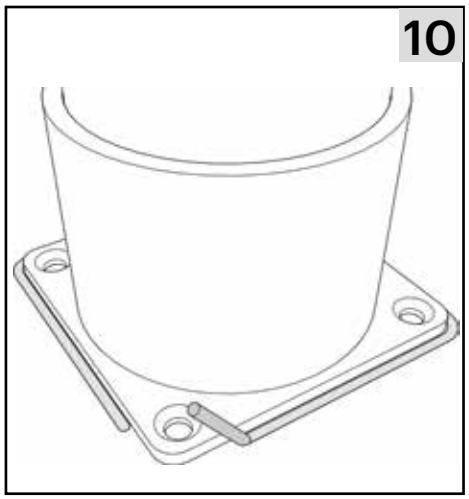
10

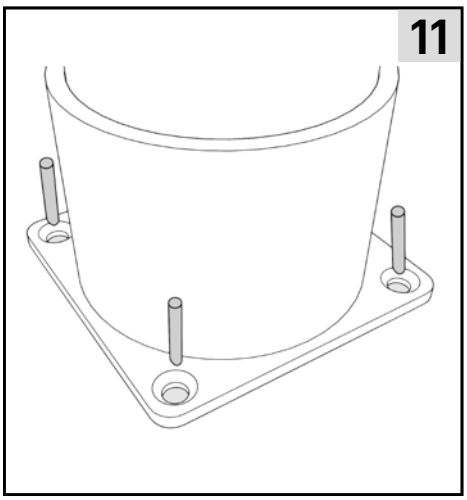
11

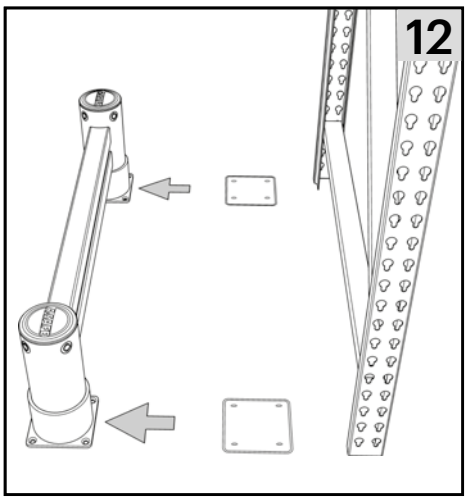
12

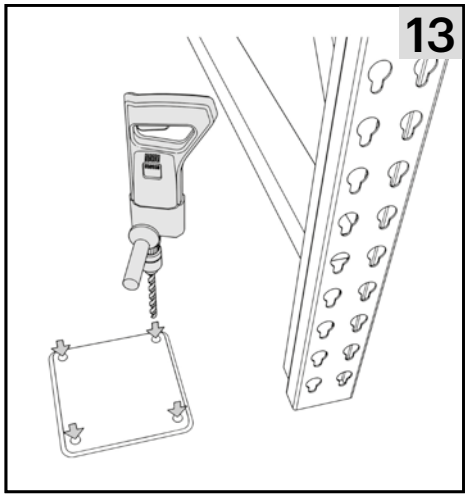
13

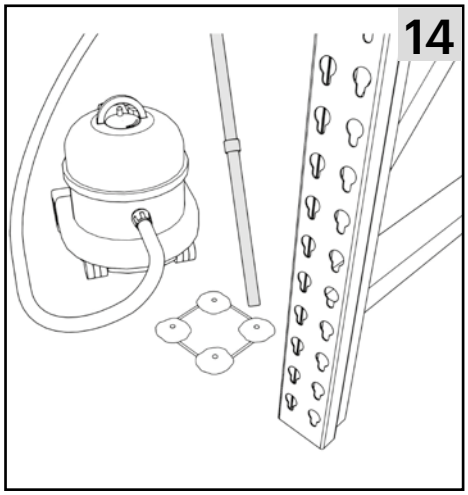
14

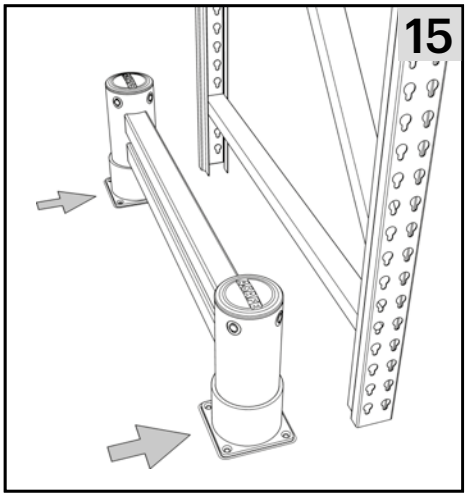
15

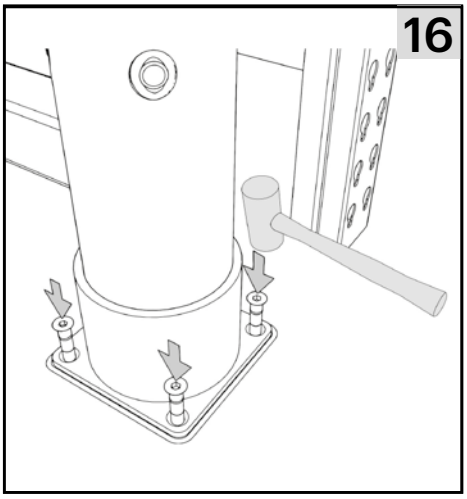
16

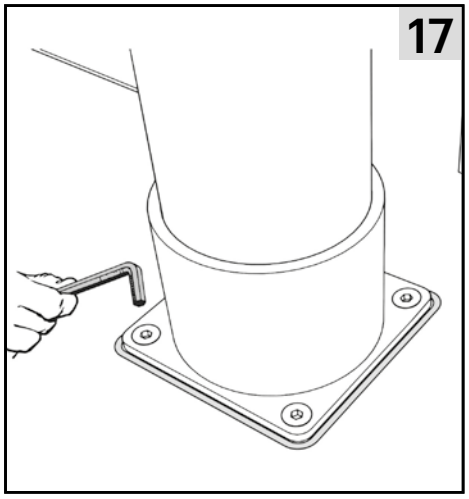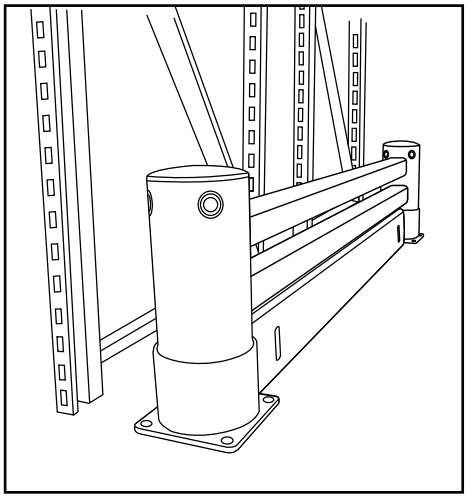
17